宏聚电子五金制品有限公司

HONGJU ELECTRONIC & METAL PRODUCTS CO.,LTD

MR-1

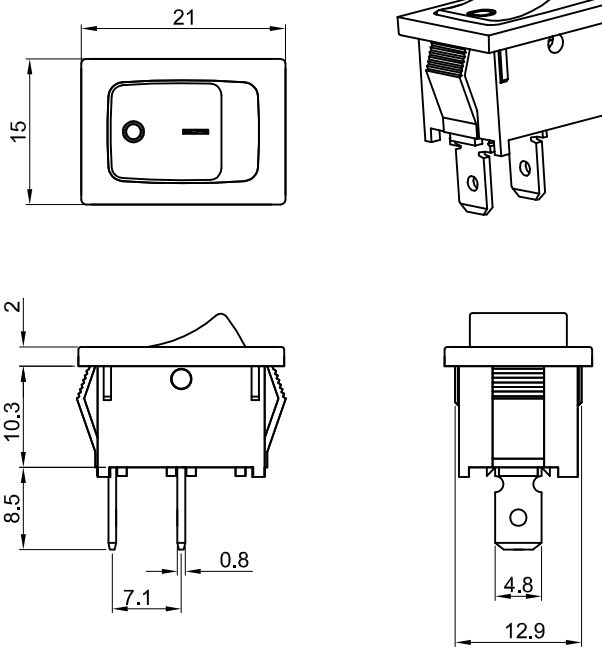

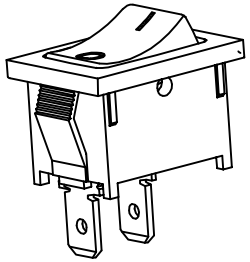

Rating: 10A 125V AC (UL CUL)
6A 250V AC (UL CUL VDE CB)
Contact Resistance: 50mΩ Max
Insulation Resistance: DC 500V 100MΩ Min
Dielectric Strength: AC1500V 1 minute
Dlectrical life: 10,000 cycles
Operating Temperature: 0℃~85℃

CUT-OUT

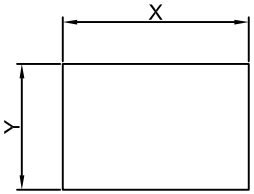

	X	Y
0.75~1.25	19.2-0.1	13.0+0.1
1.25~2.00	19.4-0.1	13.0+0.1
2.00~3.00	19.8-0.1	13.0+0.1

SWITCHING CIRCUIT

MATERIAL:
Body:Nylon66,UL rated:94V-2 min
Actuator:Nylon66,UL rated:94V-2 min
Terminal:Brass,silver or tin plated

X	0	1	2	3	4	5	7	8	9	A	B	C	D	E	G
Marking	none	•	ON OFF	=	— o	I o	ON/开 OFF/关		O/I		反 O I			开 关	

				公差 TOLEANCES	.X±0.3 .XX±0.15		角度 ANGLE ±1°		单位 DIMENSION UNIT mm.		
				版 本 VERSION	A0	比例尺 SCALE	NONE	日 期 DATE	2009.02.26	品 名 TITLE	图 号 DRAWING NO
A0	New Issue	2009.02.26	N/A	核 准 APPROVED BY	Xinchao_Lee	核 对 CHECKED BY	Gokey_Guo	绘 图 DRAWN BY	Gokey_Guo	MR-1-110-C5N-BB	MR-1-110-C5N-BB-A0
版本 VER.	变 更 说 明 CHANGE DESCRIPTION	日期 DATE	ECN NO.								

File Code: HJ-WI-E-03A