RoHS compliant
by exemption

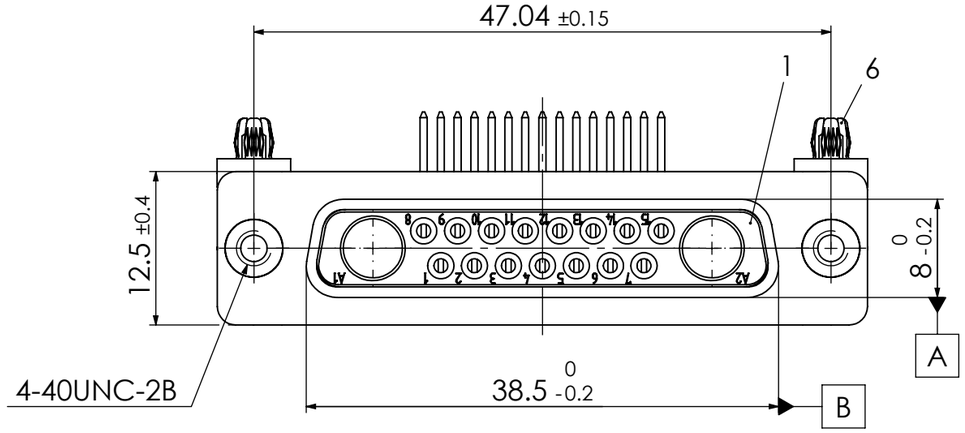

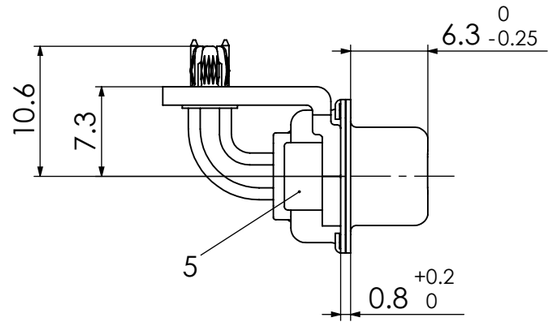

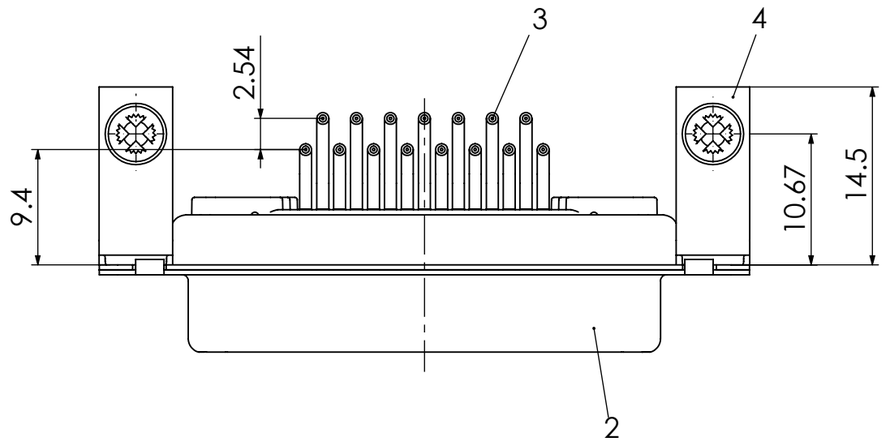

PCB hole pattern, mounting side

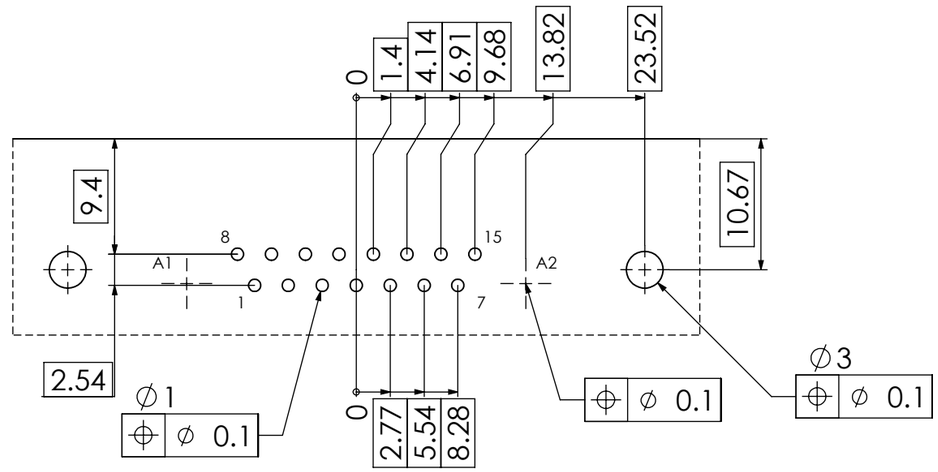

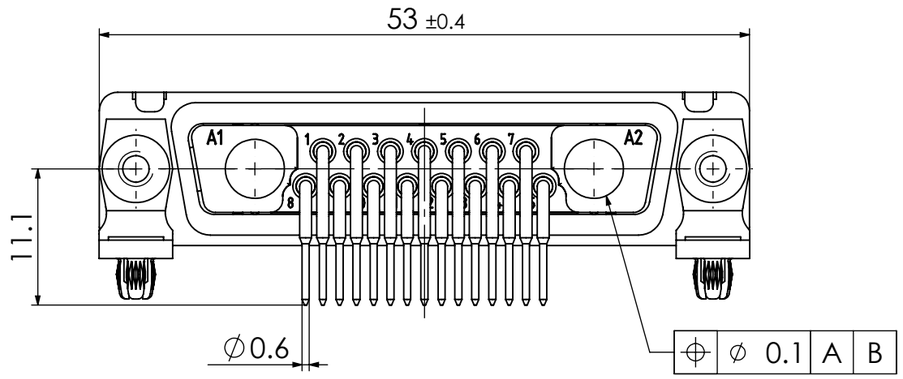

No.	St.	Part	Type Description/Material	Surface plating/Colour/Class
6	2	Snap-in rivet	PCB 1.6mm / Brass	tin plated
5	2	Clinch nut	MW 4-40 / Steel	tin plated
4	2	Bracket	F1080-13B / Steel	tin plated
3	15	Signal contact	S5 / Brass	0.8µm Au
2	1	Shell	Steel	tin plated
1	1	Insulator	PBT (-55°C to +130°C) acc. UL94V-0	green

FUNCTIONAL SYMBOLS
= 0
= 0
= 0

THIS DRAWING CONTAINS INFORMATION THAT IS PROPRIETARY TO MOLEX ELECTRONIC TECHNOLOGIES, LLC AND SHOULD NOT BE USED WITHOUT WRITTEN PERMISSION

DIMENSION UNITS: mm
SCALE: 2:1
MEASUREMENTS WITHOUT TOLERANCE ACC. TO: ISO 2768-m

REV.	CH.-NO.
3	24193
2	24130
1	

CURRENT REVISION
DRWN: DRAWN BY msteinbrueck 01-09-2022
APPR: APPR BY fvetter 28-03-2023

INITIAL REVISION
DRWN: DRAWN BY ADenzinger 12-09-2006
APPR: APPR BY skusber 14-09-2006

REPLACEMENT FOR:
FRIST ANGLE PROJECTION
DRAWING: A3-SIZE

molex

FCT D-Sub Mixed-Layout Connector

PRODUCT CUSTOMER DRAWING

MATERIAL NUMBER: 1731070080
REVISION: 3
DOCUMENT NUMBER: FM17W2S5-1002
CUSTOMER: GENERAL MARKET
SHEET NUMBER: 1 OF 1

COMMENT:
ALL RIGHTS ARE RESERVED BY US FOR THIS DRAWING, WITHOUT OUR PRIOR CONSENT, IT MAY NEITHER BE DUBLICATED NOR MADE AVAILABLE TO A THIRD PARTY, AND IT ALSO MAY NOT BE IMPROPERLY USED BY TE RECEIVER, OR A THIRD PARTY.