RoHS compliant
by exemption

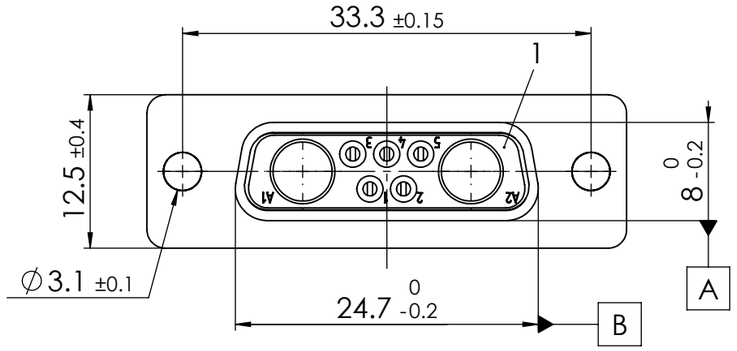

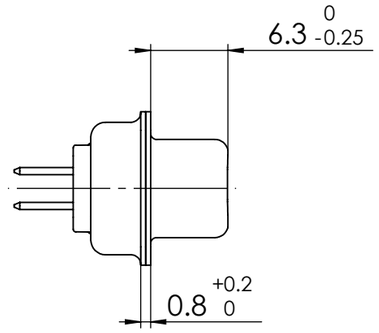

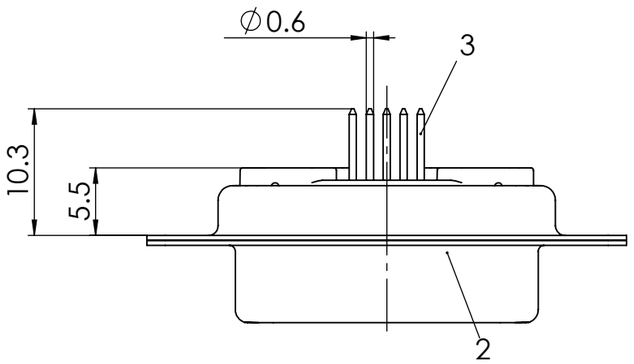

PCB hole pattern, mounting side

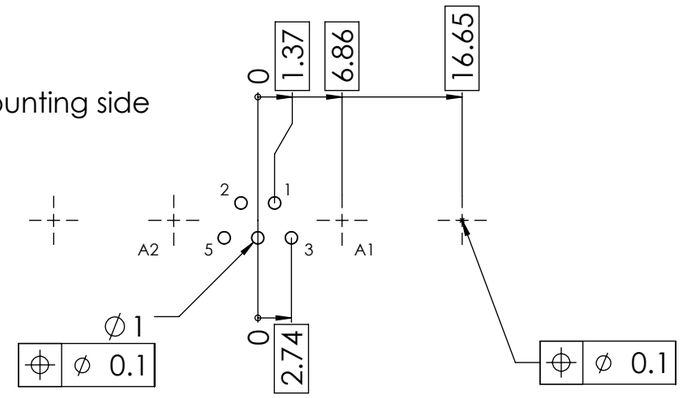

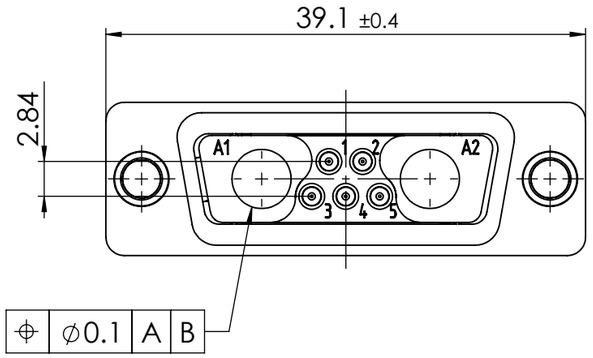

No.	St.	Part	Type Description/Material	Surface plating/Colour/Class
3	5	Signal contact	S1 / Brass	0.8µm Au
2	1	Shell	Steel	tin plated
1	1	Insulator	PBT (-55°C to +130°C) acc. UL94V-0	green

FUNCTIONAL SYMBOLS
E = 0
E = 0
E = 0

THIS DRAWING CONTAINS INFORMATION THAT IS PROPRIETARY TO MOLEX ELECTRONIC TECHNOLOGIES, LLC AND SHOULD NOT BE USED WITHOUT WRITTEN PERMISSION

DIMENSION UNITS: mm
SCALE: 2:1
MEASUREMENTS WITHOUT TOLERANCE ACC. TO: ISO 2768-m

REV.	CH.-NO.
3	24410
2	24130
1	

CURRENT REVISION
DRWN: DRAWN BY msteinbrueck 09-08-2023
APPR: APPR BY fvetter 17-08-2023

INITIAL REVISION
DRWN: DRAWN BY sschref 23-03-2005
APPR: APPR BY adenzinger 06-04-2005

molex

FCT D-Sub Mixed-Layout Connector

PRODUCT CUSTOMER DRAWING

MATERIAL NUMBER: 1731070094
REVISION: 3

REPLACEMENT FOR: 1731070094_Rev. A1
FRIST ANGLE PROJECTION
DRAWING: A3-SIZE
DOCUMENT NUMBER: FM7W2S1-K121
CUSTOMER: GENERAL MARKET
SHEET NUMBER: 1 OF 1

COMMENT:
ALL RIGHTS ARE RESERVED BY US FOR THIS DRAWING, WITHOUT OUR PRIOR CONSENT,
IT MAY NEITHER BE DUBLICATED NOR MADE AVAILABLE TO A THIRD PARTY,
AND IT ALSO MAY NOT BE IMPROPERLY USED BY TE RECEIVER, OR A THIRD PARTY.