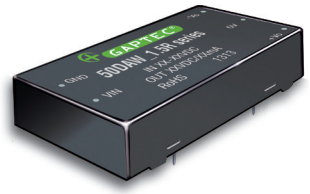

# 50DAW_1.5R series

50W - Single Output - Wide Input - Isolated & Regulated DC-DC Converter

## 24Vin DC-DC Converter 50 Watt

- Wide 2:1 input voltage range
- High efficiency up to 91%
- Input under-voltage protection, output short circuit, over-current, over–voltage protection
- Operating ambient temp. range: -40°C to +105°C
- No-load power consumption as low as 0.048W
- 1.5kVDC I/O isolation
- Six-sided metal shielding package
- Input reverse polarity protection available with chassis or DIN-Rail mounting version
- Industry standard pin-out
- Meets IEC62368, UL62368 standards
- EN62368 approved

The 50DAW_1.5R series of isolated 50W DC-DC converter products with a wide 2:1 input voltage range. They feature efficiencies up to 91%, input to output isolation is tested with 1500VDC and the converter safety operate ambient temperature of -40°C to +105°C, input under-voltage protection, output over-voltage, over-current, short-circuit protection. They are ideally and widely used in applications such as industrial control, electric power, instruments and communications.

UL-62368-1 (E347551)

### Common specifications

| Item | Test condition | Min | Typ | Max | Units |
|---|---|---|---|---|---|
| Short circuit protection | Continuous, self-recovery | | | | |
| Operating Temperature | See Fig. 1 | -40 | | +105 | °C |
| Storage Temperature | | -55 | | +125 | °C |
| Storage humidity | Non-condensing | 5 | | 95 | %RH |
| Pin Soldering Resistance Temperature | Soldering spot is 1.5mm for 10 seconds | | | +300 | °C |
| Vibration | 10-150Hz, 5G, 0.75mm. along X, Y and Z | | | | |
| Switching Frequency * | PWM mode | | 300 | | KHz |
| MTBF | MIL-HDBK-217F@25°C | > 1000,000 h | | | |
| Hot plug: | Unavailable | | | | |
| Case material: | Aluminum alloy | | | | |
| Dimension (Without heat sink) | • Horizontal package<br>• Chassis mounting<br>• Din-Rail mounting | 50.80 × 25.40 × 11.80 mm<br>76.00 × 31.50 × 21.20 mm<br>76.00 × 31.50 × 25.80 mm | | | |
| Dimension (With heat sink) | • Horizontal package<br>• Chassis mounting<br>• Din-Rail mounting | 51.40 × 26.20 × 16.50 mm<br>76.00 × 31.50 × 25.30 mm<br>76.00 × 31.50 × 29.90 mm | | | |
| Weight (Without heat sink) | • Horizontal package<br>• Chassis mounting<br>• Din-Rail mounting | 39g TYP.<br>62g TYP.<br>82g TYP. | | | |
| Weight (With heat sink) | • Horizontal package<br>• Chassis mounting<br>• Din-Rail mounting | 47g TYP.<br>70g TYP.<br>90g TYP. | | | |
| Cooling: | Free air convection | | | | |

Note: *Switching frequency is measured at full load. The module reduces the switching frequency for light load (below 50%) efficiency improvement.

**Example:**
**50DAW_2415S1.5R**
**50 = 50Watt; D = DIP; A = series; W = wide input (2:1); 24 = 18-36Vin; 15 = 15Vout; S = single output; 1.5 = 1500VDC isolation; R = Revised**

Note:
1. It is recommended to use at more than 10% load. If the load is lower than 10%, the ripple of the product may exceed the specifications, but the reliability of the product is not affected.
2. The maximum capacitive load offered were tested at nominal input voltage and full load;
3. Unless otherwise specified, parameters in this datasheet were measured under the conditions of Ta = 25°C, humidity<75%RH with nominal input voltage and rated output load;
4. All index testing methods in this datasheet are based on company corporate standards;
5. We can provide product customization service, please contact our technicians directly for specific information;
6. Products are related to laws and regulations: see „Features" and „EMC";
7. Our products shall be classified according to ISO14001 and related environmental laws and regulations, and shall be handled by qualified units.

### Input specifications

| Item | Test condition | Min | Typ | Max | Units |
|---|---|---|---|---|---|
| Input Current (full load / no-load, Nominal input voltage) | • 3.3VDC output<br>• 5VDC output<br>• 12VDC output<br>• 15VDC output<br>• 24VDC output | | 1511/2<br>2289/3<br>2289/5<br>2289/11<br>2289/4 | 1545/-<br>2341/-<br>2341/-<br>2341/-<br>2341/- | mA<br>mA<br>mA<br>mA<br>mA |
| Input surge voltage | (1 sec. max.) | -0.7 | | 50 | VDC |
| Start-up voltage | | | | 18 | VDC |
| Input under voltage protection | | 11 | 13 | | VDC |
| Start-up time | Nominal input voltage & constant resistance load | | 10 | 120 | ms |
| Input filter | PI filter | | | | |
| Ctrl* | • Models ON<br>• Models OFF<br>• Input current when off | Ctrl pin open or pulled high (TTL 3.0-12VDC)<br>Ctrl pin pulled low to GND (0-1.2VDC) | 6 | 12 | mA |

Note: *The Ctrl pin voltage is referenced to input GND.

### Output specifications

| Item | Test condition | Min | Typ | Max | Units |
|---|---|---|---|---|---|
| Voltage accuracy | 5%-100% load | | ±1 | ±3 | % |
| Line regulation | Input voltage variation from low to high at full load | | ±0.2 | ±0.5 | % |
| Load regulation | 5%-100% load | | ±0.5 | ±1 | % |
| Transient recovery time | 25% load step change, nominal input voltage | | 250 | 500 | µs |
| Transient response deviation | 25% load step change, input voltage range<br>• 3.3/5VDC output<br>• others | | <br>±3<br>±3 | <br>±8<br>±5 | <br>%<br>% |
| Temperature Coefficient | Full load | | | ±0.03 | %/°C |
| Ripple & Noise* | 20MHz bandwidth, 5%-100% load<br>• 3.3/5VDC output<br>• 12 /15VDC output<br>• 24VDC output | | <br>120<br>180<br>240 | <br>200<br>250<br>300 | <br>mVp-p<br>mVp-p<br>mVp-p |
| Trim | | 90 | | 110 | VDC |
| Over voltage protection | Input voltage range | 110 | 140 | 160 | %Vo |
| Over current protection | Input voltage range | 110 | 140 | 200 | %Io |

Note: *The "parallel cable" method is used for Ripple and Noise test, please refer to DC-DC Converter Application Notes for specific information.



GAPTEC-Electronic GmbH & Co. KG
sales@gaptec-electronic.com – www.gaptec-electronic.com

| Isolation specifications | | | | | |
|---|---|---|---|---|---|
| Item | Test condition | Min | Typ | Max | Units |
| Isolation voltage | • Input-output Electric Strength Test for 1 minute with a leakage current of 1mA max.<br>• Input/output-Housing Electric Strength Test for 1 minute with a leakage current of 1mA max. | 1500<br>1000 | | | VDC |
| Isolation resistance | Input-output resistance at 500VDC | 100 | | | MΩ |
| Isolation capacitance | Input-output capacitance at 100KHz/0.1V | | 2200 | | pF |

| EMC specifications | | | |
|---|---|---|---|
| Emissions | CE | CISPR32/EN55032 CLASS B<br>(see Fig.3 for recommended circuit) | |
| Emissions | RE | CISPR32/EN55032 CLASS B<br>(see Fig.3 for recommended circuit) | |
| Immunity | ESD | IEC/EN61000-4-2 Contact ±4KV | perf. Criteria B |
| Immunity | RS | IEC/EN61000-4-3 10V/m | perf. Criteria A |
| Immunity | EFT | IEC/EN61000-4-4 100KHz ±2KV<br>(see Fig.3 for recommended circuit) | perf. Criteria B |
| Immunity | Surge | IEC/EN61000-4-5 line to line ±2KV<br>(see Fig.3 for recommended circuit) | perf. Criteria B |
| Immunity | CS | IIEC/EN61000-4-6 10 Vr.m.s | perf. Criteria A |

# Product Selection Guide

| Part Number | Input Voltage [VDC] Nominal | Range | Max[1] | Output Voltage [VDC] | Output Current [mA, Max] | Efficiency [%, Min./Typ.] | Capacitive load [µF, Max] |
|---|---|---|---|---|---|---|---|
| 50DAW_2403S1.5R | 24 | 18-36 | 40 | 3.3 | 10000/500 | 89/91 | 27000 |
| 50DAW_2405S1.5R | 24 | 18-36 | 40 | 5 | 10000/500 | 89/91 | 18900 |
| 50DAW_2412S1.5R | 24 | 18-36 | 40 | 12 | 4167/208 | 89/91 | 3700 |
| 50DAW_2415S1.5R | 24 | 18-36 | 40 | 15 | 3333/167 | 89/91 | 2000 |
| 50DAW_2424S1.5R | 24 | 18-36 | 40 | 24 | 2083/104 | 89/91 | 1000 |

Notes:
① Recommended to choose modules with a heat sink for enhanced heat dissipation and applications with extreme temperature requirements;
②The minimum input voltage and starting voltage of chassis mounting and DIN-Rail mounting Model are 1VDC higher than those of DIP package due to input reverse polarity protection function;
③Exceeding the maximum input voltage may cause permanent damage;
④Efficiency is measured at nominal input voltage and rated output load; efficiencies for chassis mounting and DIN-Rail mounting Model's is decreased by 2% due to the input reverse polarity protection circuit.

# Typical characteristics

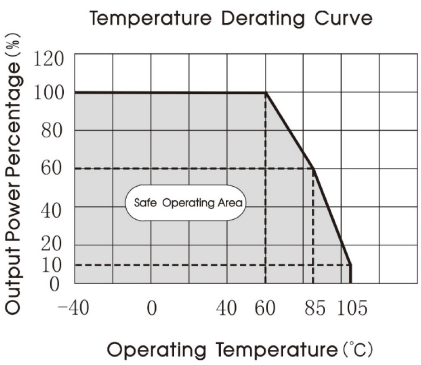


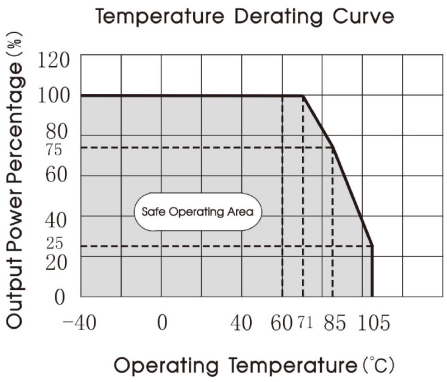


Fig. 1

# Typical application

All DC-DC converters of this series are tested before delivery using the recommended circuit shown in Fig. 2. Input and/or output ripple can be further reduced by appropriately increasing the input & output capacitor values Cin and Cout and/or by selecting capacitors with a low ESR (equivalent series resistance). Also make sure that the capacitance is not exceeding the specified max. capacitive load value of the product


Fig. 2

| Vout (VDC) | Cin (µF) | Cout (µF) |
|---|---|---|
| 3.3 | 100µF/50V | 470µF/10V |
| 12/15 | 100µF/50V | 100µF/25V |
| 24 | 100µF/50V | 47µF/50V |

# EMC compliance circuit

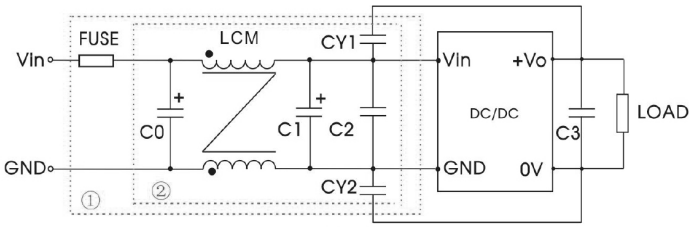


Fig. 3

Notes: We use Part ① in Fig. 3 for Immunity tests and Part ② for Emissions test. Selecting based on needs.

Parameter description:

| Model | Vin:24V |
|---|---|
| FUSE | T/4A/250VAC |
| C0 | 680µF/50V |
| LCM | 2.2mH |
| C1 | 330µF/50V |
| C2 | 4.7uF/50V |
| CY1, CY2 | Y1 Safety capacitor 2.2nF/250VAC |
| C3 | Refer to the Cout in Fig.2 |

# Trim Function for Output Voltage Adjustment (open if unused)

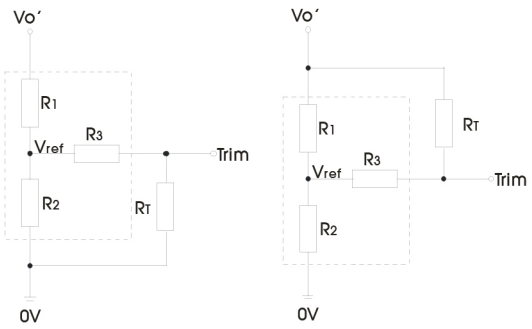


TRIM resistor connection (dashed line shows internal resistor network)

Calculating Trim resistor values:

$$\text{up:}\quad R_T = \frac{aR_2}{R_2 - a} - R_3 \qquad a = \frac{V_{ref}}{V_o' - V_{ref}} \cdot R_1$$

$$\text{down:}\quad R_T = \frac{aR_1}{R_1 - a} - R_3 \qquad a = \frac{V_o' - V_{ref}}{V_{ref}} \cdot R_2$$

RT is Trim resistance
a is a self-defined parameter, with no real meaning.

| Vout(V) | Vout adjustable value(V) | RT(KΩ) | R1(KΩ) | R2(KΩ) | R3(KΩ) | Vref(V) |
|---|---|---|---|---|---|---|
| 3.3 | Up: 3.63 | 15.0 | 4.83 | 2.87 | 4.7 | 1.24 |
| 3.3 | Down: 2.97 | 18.7 | 4.83 | 2.87 | 4.7 | 1.24 |
| 5 | Up: 5.5 | 13.3 | 2.87 | 2.87 | 4.7 | 2.5 |
| 5 | Down: 4.5 | 5.4 | 2.87 | 2.87 | 4.7 | 2.5 |
| 12 | Up: 13.2 | 7.6 | 10.90 | 2.87 | 15 | 2.5 |
| 12 | Down: 10.8 | 60.7 | 10.90 | 2.87 | 15 | 2.5 |
| 15 | Up: 16.5 | 8.9 | 14.35 | 2.87 | 15 | 2.5 |
| 15 | Down: 13.5 | 90.2 | 14.35 | 2.87 | 15 | 2.5 |
| 24 | Up: 26.4 | 21.6 | 48.77 | 2.87 | 5.1 | 2.5 |
| 24 | Down: 21.6 | 185.9 | 48.77 | 2.87 | 5.1 | 2.5 |

The products do not support parallel connection of their output

## Horizontal Package - Dimensions and Recommended Layout

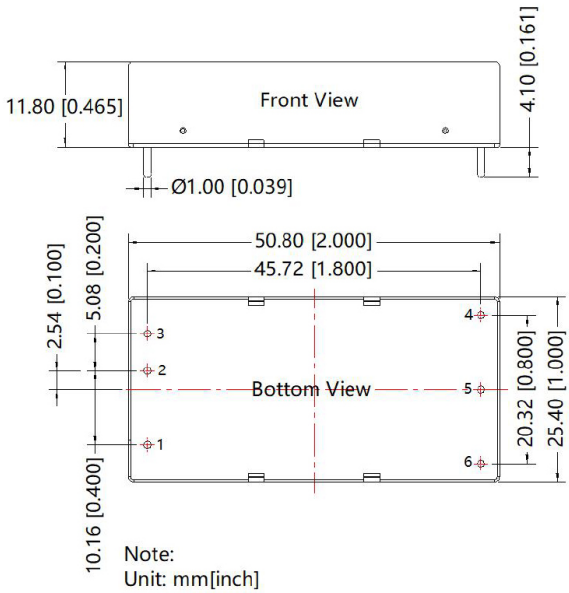


Note:
Unit: mm[inch]
Pin diameter tolerances: ±0.10[±0.004]
General tolerances: ±0.50[±0.020]

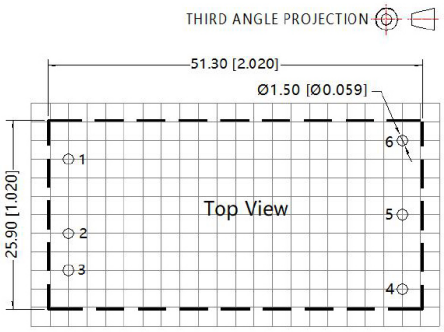


Note : Grid 2.54*2.54mm

| Pin-Out | |
|---|---|
| Pin | Function |
| 1 | Ctrl |
| 2 | GND |
| 3 | Vin |
| 4 | +Vo |
| 5 | 0V |
| 6 | Trim |

## Chassis Mounting - Dimensions and Recommended Layout

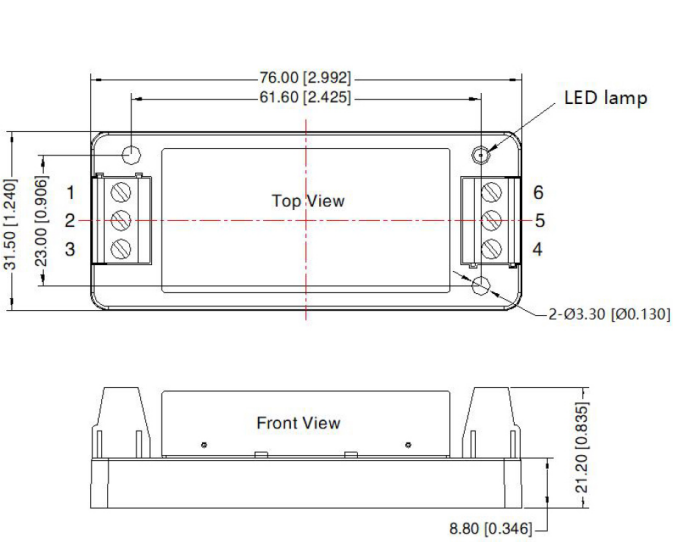


| Pin–Out | | | | | | |
|---|---|---|---|---|---|---|
| Pin | 1 | 2 | 3 | 4 | 5 | 6 |
| Function | Ctrl | GND | Vin | +Vo | 0V | Trim |

Note:
Unit: mm[inch]
Wire range: 24–12 AWG
Tightening torque: Max 0.4 N·m
General tolerances: ± 1.00[ ± 0.039]

# Din-Rail mounting - Dimensions and Recommended Layout

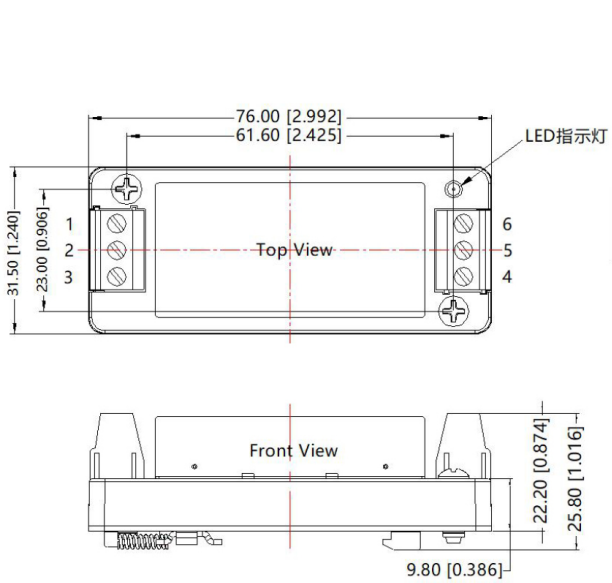


| Pin-Out | | | | | | |
|---|---|---|---|---|---|---|
| Pin | 1 | 2 | 3 | 4 | 5 | 6 |
| Function | Ctrl | GND | Vin | +Vo | 0V | Trim |

Note:
Unit: mm[inch]
Mounting rail: TS35
Wire range: 24-12 AWG
Tightening torque: Max 0.4 N·m
General tolerances: ±1.00[±0.039]

# Horizontal Package- Dimensions and Recommended Layout (With Heat Sink)

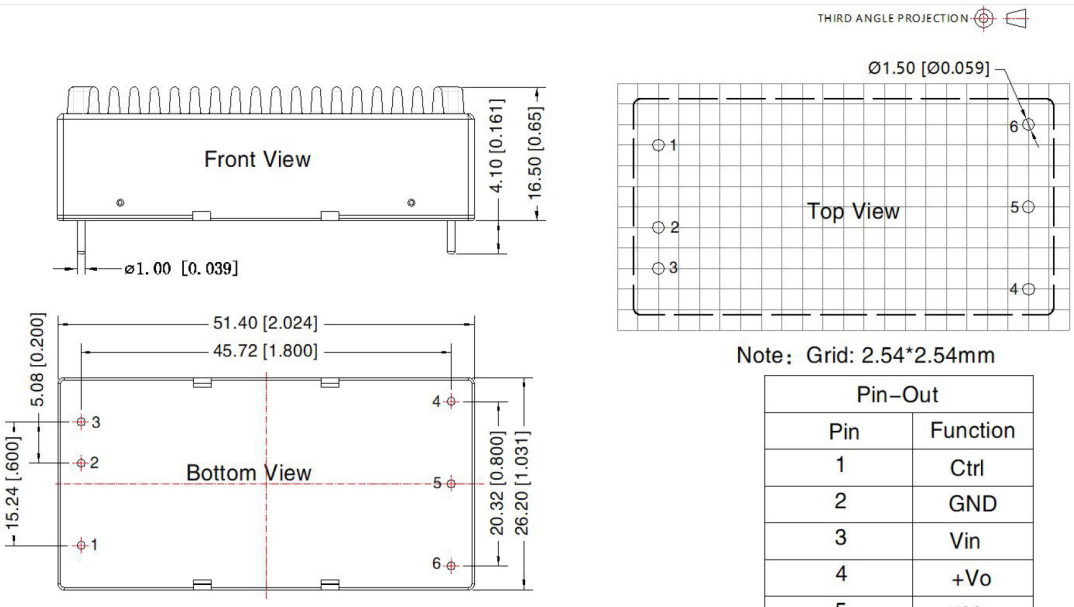


Note: Grid: 2.54*2.54mm

| Pin–Out | |
|---|---|
| Pin | Function |
| 1 | Ctrl |
| 2 | GND |
| 3 | Vin |
| 4 | +Vo |
| 5 | 0V |
| 6 | Trim |

Note:
Unit: mm[inch]
Pin diameter tolerances: ± 0.10[ ± 0.004]
General tolerances: ± 0.50[ ± 0.020]

## Chassis Mounting - Dimensions and Recommended Layout (With Heat Sink)

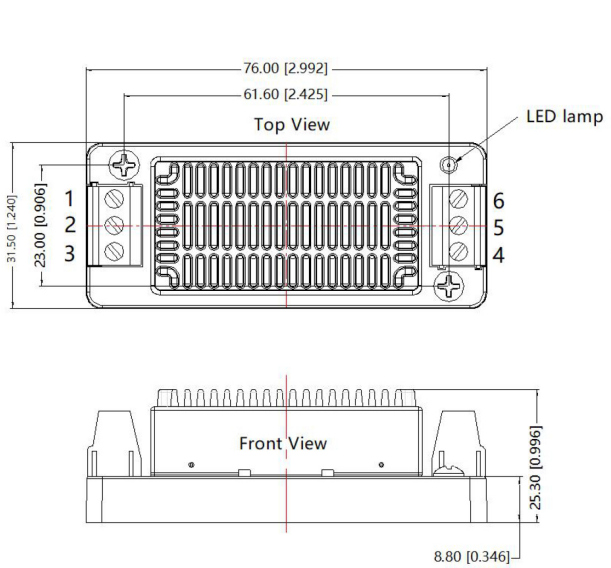


| Pin-Out | | | | | | |
|---|---|---|---|---|---|---|
| Pin | 1 | 2 | 3 | 4 | 5 | 6 |
| Function | Ctrl | GND | Vin | +Vo | 0V | Trim |

Note:
Unit: mm[inch]
Mounting rail: TS35
Wire range: 24-12 AWG
Tightening torque: Max 0.4 N·m
General tolerances: ±1.00[±0.039]

## Din-Rail mounting - Dimensions and Recommended Layout (With Heat Sink)

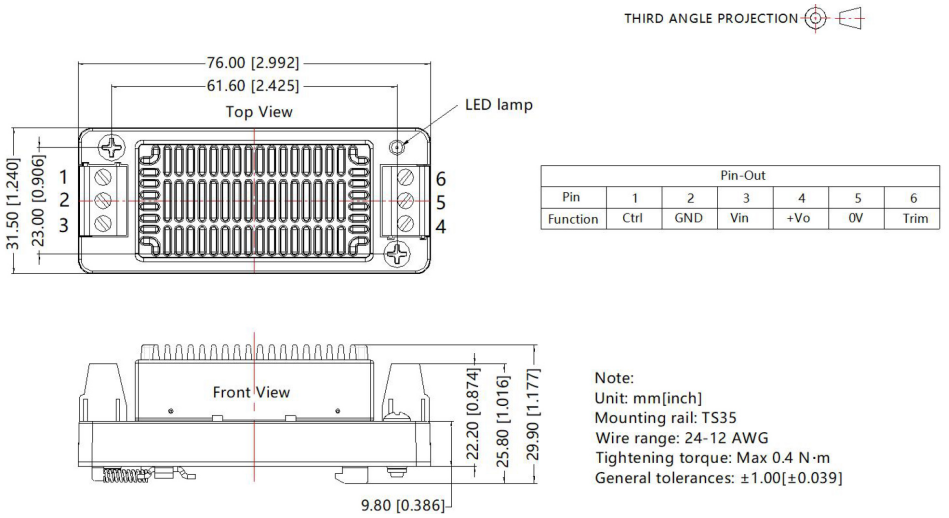


| Pin-Out | | | | | | |
|---|---|---|---|---|---|---|
| Pin | 1 | 2 | 3 | 4 | 5 | 6 |
| Function | Ctrl | GND | Vin | +Vo | 0V | Trim |

Note:
Unit: mm[inch]
Mounting rail: TS35
Wire range: 24-12 AWG
Tightening torque: Max 0.4 N·m
General tolerances: ±1.00[±0.039]

## 50DAW_1.5R series

50W - Single Output - Wide Input - Isolated & Regulated DC-DC Converter

## 48Vin DC-DC Converter 50 Watt

- Wide 2:1 input voltage range
- High efficiency up to 92%
- 1.5kVDC I/O isolation
- Input under-voltage protection, output short circuit, over-current, over–voltage protection
- Operating ambient temp. range: -40°C to +105°C
- No-load power consumption as low as 0.048W
- Six-sided metal shielding package
- Input reverse polarity protection available with chassis or DIN-Rail mounting version
- Industry standard pin-out
- Meets IEC62368, UL62368, EN62368 standards

The 50DAW_1.5R series of of isolated 50W DC-DC converter products with a wide 2:1 input voltage range. They feature efficiencies up to 92%, input to output isolation is tested with 1500VDC and the converter safety operate ambient temperature of -40° to +105°C, input under-voltage protection, output short-circuit, over-current, over-voltage protection. They are ideally and widely used in applications such as industrial control, electric power, instruments and communications.

### Common specifications

| Item | Test condition | Min | Typ | Max | Units |
|---|---|---|---|---|---|
| Short circuit protection | Hiccup, continuous, self-recovery | | | | |
| Operating Temperature | See Fig. 1 | -40 | | +105 | °C |
| Storage Temperature | | -40 | | +125 | °C |
| Storage humidity | | 5 | | 95 | %RH |
| Soldering Resistance Temperature | Soldering spot is 1.5mm for 10 seconds | | | +300 | °C |
| Vibration | 10-150Hz, 5G, 0.75mm. along X, Y and Z | | | | |
| Switching Frequency * | PWM mode | | 300 | | KHz |
| MTBF | MIL-HDBK-217F@25°C | > 1000,000 h | | | |
| Hot plug: | Unavailable | | | | |
| Case material: | Aluminum alloy | | | | |
| Dimension (Without heat sink) | • Horizontal package<br>• Chassis mounting<br>• Din-Rail mounting | 50.80 × 25.40 × 11.80 mm<br>76.00 × 31.50 × 21.20 mm<br>76.00 × 31.50 × 25.80 mm | | | |
| Dimension (With heat sink) | • Horizontal package<br>• Chassis mounting<br>• Din-Rail mounting | 51.40 × 26.20 × 16.50 mm<br>76.00 × 31.50 × 25.30 mm<br>76.00 × 31.50 × 29.90 mm | | | |
| Weight (Without heat sink) | • Horizontal package<br>• Chassis mounting<br>• Din-Rail mounting | 42g TYP.<br>65g TYP.<br>85g TYP. | | | |
| Weight (With heat sink) | • Horizontal package<br>• Chassis mounting<br>• Din-Rail mounting | 50g TYP.<br>73g TYP.<br>93g TYP. | | | |
| Cooling: | Free air convection | | | | |

Note: *Switching frequency is measured at full load. The module reduces the switching frequency for light load (below 50%) efficiency improvement.

**Example:**
**50DAW_2415S1.5R**
**50 = 50Watt; D = DIP; A = series; W = wide input (2:1); 24 = 18-36Vin; 15 = 15Vout; S = single output; 1.5 = 1500VDC isolation; R = Revised**

Note:
1. It is recommended to use at more than 10% load. If the load is lower than 10%, the ripple of the product may exceed the specifications, but the reliability of the product is not affected.
2. The maximum capacitive load offered were tested at nominal input voltage and full load;
3. Unless otherwise specified, parameters in this datasheet were measured under the conditions of Ta = 25°C, humidity<75%RH with nominal input voltage and rated output load;
4. All index testing methods in this datasheet are based on company corporate standards;
5. We can provide product customization service, please contact our technicians directly for specific information;
6. Products are related to laws and regulations: see „Features" and „EMC";
7. Our products shall be classified according to ISO14001 and related environmental laws and regulations, and shall be handled by qualified units.

### Input specifications

| Item | Test condition | Min | Typ | Max | Units |
|---|---|---|---|---|---|
| Input Current (full load /no-load, Nominal input voltage) | • 3.3VDC output<br>• 5VDC output<br>• 12VDC output<br>• 15VDC output<br>• 24VDC output | | 756/1<br>1145/2<br>1133/4<br>1133/4<br>1133/3 | 773/--<br>1171/--<br>1158/--<br>1158/--<br>1158/-- | mA<br>mA<br>mA<br>mA<br>mA |
| Input surge voltage | (1 sec. max.) | -0.7 | | 80 | VDC |
| Start-up voltage | | | | 36 | VDC |
| Input under voltage protection | 26 | 30 | | | VDC |
| Start-up time | Nominal input voltage & constant resistance load | | 10 | 120 | ms |
| Input filter | PI | | | | |
| Ctrl* | • Models ON<br>• Models OFF<br>• Input current when off | Ctrl pin open or pulled high (TTL 3.0-12VDC)<br>Ctrl pin pulled low to GND (0-1.2VDC) | 2 | 12 | mA |

Note: *The Ctrl pin voltage is referenced to input GND.

### Output specifications

| Item | Test condition | Min | Typ | Max | Units |
|---|---|---|---|---|---|
| Voltage accuracy | 5%-100% load | | ±1 | ±3 | % |
| Line regulation | Input voltage variation from low to high at full load | | ±0.2 | ±0.5 | % |
| Load regulation | 5%-100% load | | ±0.5 | ±1 | % |
| Transient recovery time | 25% load step change, nominal input voltage | | 250 | 500 | µs |
| Transient response deviation | 25% load step change, input voltage range<br>• 3.3/5VDC output<br>• others | | <br>±3<br>±3 | <br>±8<br>±5 | <br>%<br>% |
| Temperature Coefficient | Full load | | | ±0.03 | %/°C |
| Ripple & Noise* | 20MHz bandwidth, 5%-100% load<br>• 3.3/5VDC output<br>• 12 /15VDC output<br>• 24VDC output | | <br>170<br>200<br>180 | <br>200<br>250<br>350 | <br>mVp-p<br>mVp-p<br>mVp-p |
| Trim | | 90 | | 110 | VDC |
| Over voltage protection | Input voltage range | 110 | 140 | 160 | %Vo |
| Over current protection | Input voltage range | 110 | 140 | 200 | %Io |

Note: *The "parallel cable" method is used for Ripple and Noise test, please refer to DC-DC Converter Application Notes for specific information.

### Isolation specifications

| Item | Test condition | Min | Typ | Max | Units |
|---|---|---|---|---|---|
| Isolation voltage | • Input-output Electric Strength Test for 1 minute with a leakage current of 1mA max. | 1500 | | | VDC |
| | • Input/output-Housing Electric Strength Test for 1 minute with a leakage current of 1mA max. | 1000 | | | |
| Isolation resistance | Test at 500VDC | 100 | | | MΩ |
| Isolation capacitance | 100KHz/0.1V | | 2200 | | pF |

### EMC specifications

| | | | |
|---|---|---|---|
| Emissions | CE | CISPR32/EN55032 CLASS B (see Fig.3 for recommended circuit) | |
| Emissions | RE | CISPR32/EN55032 CLASS B (see Fig.3 for recommended circuit) | |
| Immunity | ESD | IEC/EN61000-4-2 Contact ±6KV | perf. Criteria B |
| Immunity | RS | IEC/EN61000-4-3 10V/m | perf. Criteria A |
| Immunity | EFT | IEC/EN61000-4-4 100KHz ±2KV (see Fig.3 for recommended circuit) | perf. Criteria B |
| Immunity | Surge | IEC/EN61000-4-5 line to line ±2KV (see Fig.3 for recommended circuit) | perf. Criteria B |
| Immunity | CS | IIEC/EN61000-4-6 10 Vr.m.s | perf. Criteria A |

### Selection Guide

| Part Number | Input Voltage [VDC] Nominal | Range | Max[1] | Output Voltage [VDC] | Output Current [mA, Max] | Efficiency [%, Min./Typ.] | Capacitive load [µF, Max] |
|---|---|---|---|---|---|---|---|
| 50DAW_4803S1.5R | 48 | 36-75 | 80 | 3.3 | 10000 | 89/91 | 27000 |
| 50DAW_4805S1.5R | 48 | 36-75 | 80 | 5 | 10000 | 89/91 | 18900 |
| 50DAW_4812S1.5R | 48 | 36-75 | 80 | 12 | 4167 | 90/92 | 3700 |
| 50DAW_4815S1.5R | 48 | 36-75 | 80 | 15 | 3333 | 90/92 | 2000 |
| 50DAW_4824S1.5R | 48 | 36-75 | 80 | 24 | 2083 | 90/92 | 1000 |

Notes:
① Recommended to choose modules with a heat sink for enhanced heat dissipation and applications with extreme temperature requirements;
②The minimum input voltage and starting voltage of chassis mounting and DIN-Rail mounting Model are 1VDC higher than those of DIP package due to input reverse polarity protection function;
③Exceeding the maximum input voltage may cause permanent damage;
④Efficiency is measured at nominal input voltage and rated output load; efficiencies for chassis mounting and DIN-Rail mounting Model's is decreased by 2% due to the input reverse polarity protection circuit.

## Typical characteristics

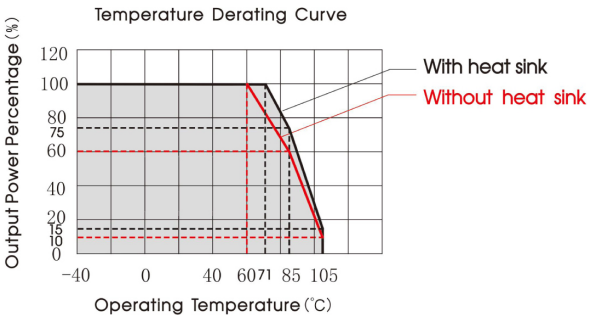


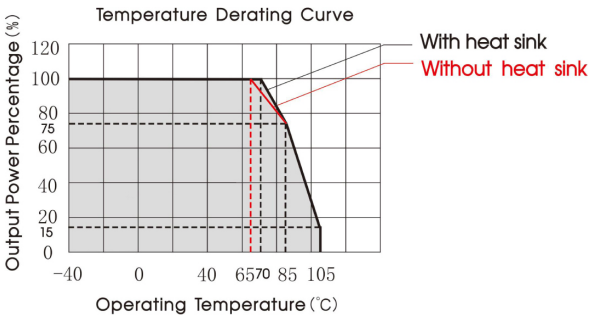


Fig. 1

## Typical application

All DC-DC converters of this series are tested before delivery using the recommended circuit shown in Fig. 2. Input and/or output ripple can be further reduced by appropriately increasing the input & output capacitor values Cin and Cout and/or by selecting capacitors with a low ESR (equivalent series resistance). Also make sure that the capacitance is not exceeding the specified max. capacitive load value of the product


Fig. 2

| Vout (VDC) | Cin (µF) | Cout (µF) |
|---|---|---|
| 3.3 | 200µF/10V | 470µF/10V |
| 5 | 100µF/50V | 470µF/10V |
| 12/15 | 100µF/50V | 100µF/25V |
| 24 | 100µF/50V | 47µF/50V |

# EMC compliance circuit

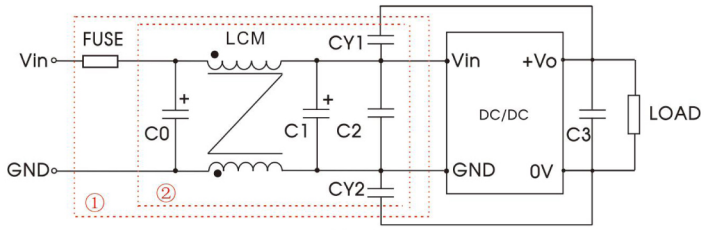


Fig. 3

Notes: We use Part ① in Fig. 3 for Immunity tests and Part ② for Emissions test. Selecting based on needs.

Parameter description:

| Model | Vin:48V |
|---|---|
| FUSE | T/2A/250VAC |
| C0 | 330μF/100V |
| LCM | 2.2mH, recommended to use MORNSUN P/N: FL2D-30-222 |
| C1 | 330μF/100V |
| C2 | 2.2uF/100V |
| CY1, CY2 | Y1 Safety capacitor 3.3nF/250VAC |
| C3 | Refer to the Cout in Fig.2 |

# Trim Function for Output Voltage Adjustment (open if unused)

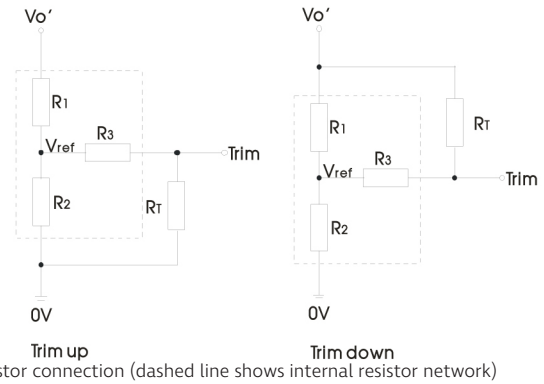


TRIM resistor connection (dashed line shows internal resistor network)

Calculating Trim resistor values:

$$\text{up:}\quad R_T = \frac{aR_2}{R_2 - a} - R_3 \qquad a = \frac{V_{ref}}{V_o' - V_{ref}} \cdot R_1$$

$$\text{wn:}\quad R_T = \frac{aR_1}{R_1 - a} - R_3 \qquad a = \frac{V_o' - V_{ref}}{V_{ref}} \cdot R_2$$

RT is Trim resistance
a is a self-defined parameter, with no real meaning.

| Vout(V) | Vout adjustable value(V) | RT(KΩ) | R1(KΩ) | R2(KΩ) | R3(KΩ) | Vref(V) |
|---|---|---|---|---|---|---|
| 3.3 | Up: 3.63 | 10 | 4.83 | 2.87 | 10 | 1.24 |
| 3.3 | Down: 2.97 | 13.5 | 4.83 | 2.87 | 10 | 1.24 |
| 5 | Up: 5.5 | 4.3 | 2.87 | 2.87 | 10 | 2.5 |
| 5 | Down: 4.5 | 1.5 | 2.87 | 2.87 | 10 | 2.5 |
| 12 | Up: 13.2 | 7.6 | 10.90 | 2.87 | 15 | 2.5 |
| 12 | Down: 10.8 | 60.7 | 10.90 | 2.87 | 15 | 2.5 |
| 15 | Up: 16.5 | 8.9 | 14.35 | 2.87 | 15 | 2.5 |
| 15 | Down: 13.5 | 90.2 | 14.35 | 2.87 | 15 | 2.5 |
| 24 | Up: 26.4 | 21.6 | 48.77 | 2.87 | 5.1 | 2.5 |
| 24 | Down: 21.6 | 185.9 | 48.77 | 2.87 | 5.1 | 2.5 |

The products do not support parallel connection of their output

## Horizontal Package - Dimensions and Recommended Layout

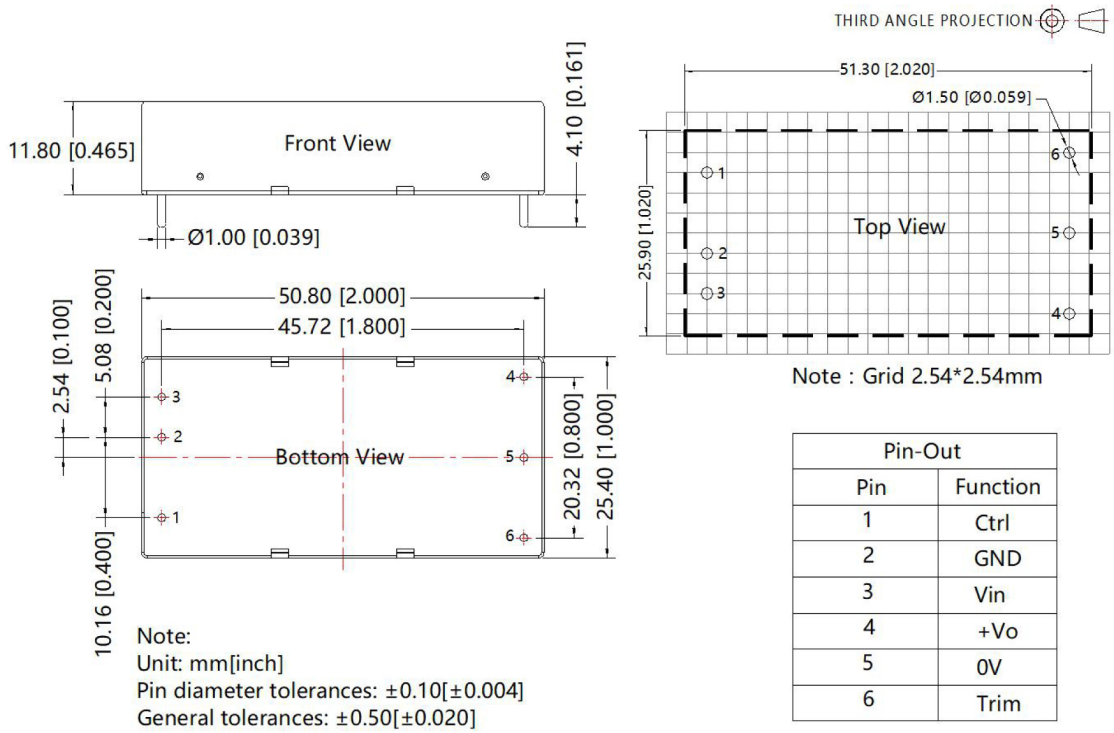


| Pin-Out | |
|---|---|
| Pin | Function |
| 1 | Ctrl |
| 2 | GND |
| 3 | Vin |
| 4 | +Vo |
| 5 | 0V |
| 6 | Trim |

## Chassis Mounting - Dimensions and Recommended Layout

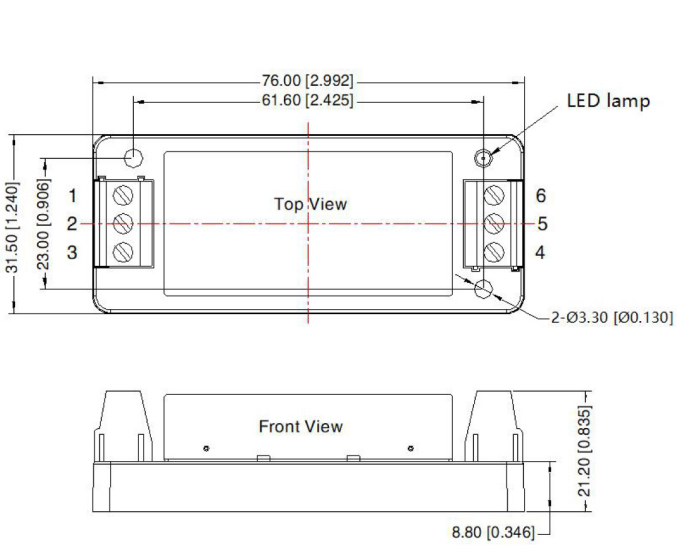


| Pin–Out | | | | | | |
|---|---|---|---|---|---|---|
| Pin | 1 | 2 | 3 | 4 | 5 | 6 |
| Function | Ctrl | GND | Vin | +Vo | 0V | Trim |

Note:
Unit: mm[inch]
Wire range: 24–12 AWG
Tightening torque: Max 0.4 N·m
General tolerances: ± 1.00[ ± 0.039]

# Din-Rail mounting - Dimensions and Recommended Layout

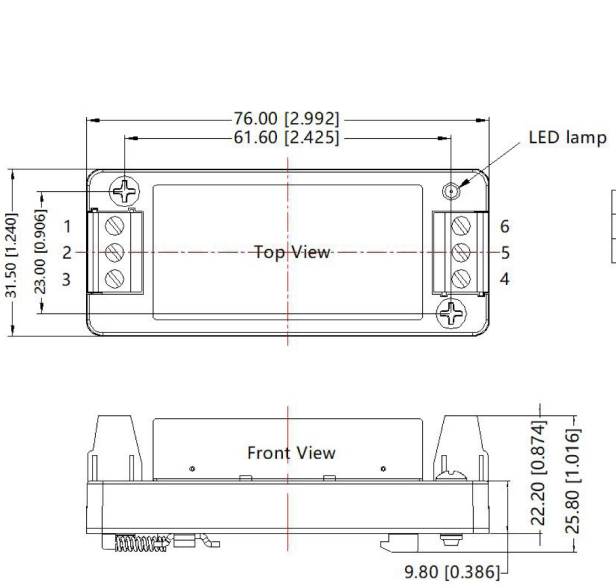


| Pin-Out | | | | | | |
|---|---|---|---|---|---|---|
| Pin | 1 | 2 | 3 | 4 | 5 | 6 |
| Function | Ctrl | GND | Vin | +Vo | 0V | Trim |

Note:
Unit: mm[inch]
Mounting rail: TS35
Wire range: 24-12 AWG
Tightening torque: Max 0.4 N·m
General tolerances: ±1.00[±0.039]

# Horizontal Package- Dimensions and Recommended Layout (With Heat Sink)

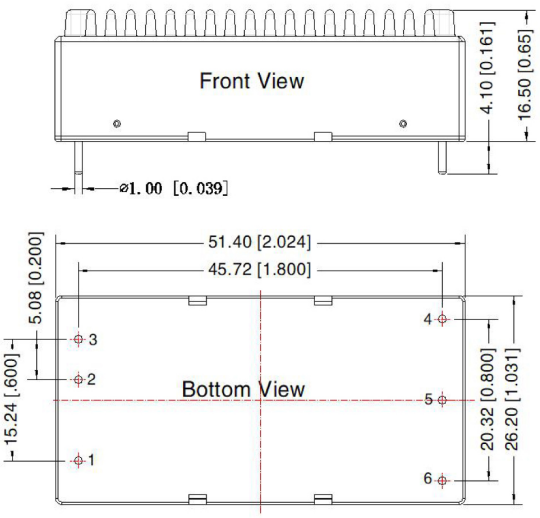


Note:
Unit: mm[inch]
Pin diameter tolerances: ± 0.10[ ± 0.004]
General tolerances: ± 0.50[ ± 0.020]

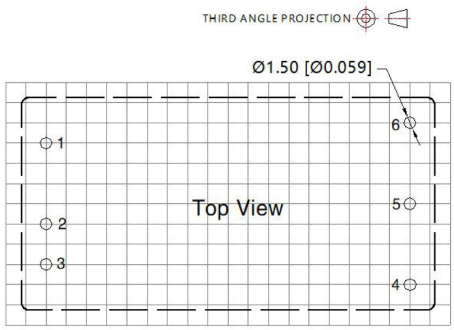


Note: Grid: 2.54*2.54mm

| Pin–Out | |
|---|---|
| Pin | Function |
| 1 | Ctrl |
| 2 | GND |
| 3 | Vin |
| 4 | +Vo |
| 5 | 0V |
| 6 | Trim |

## Chassis Mounting - Dimensions and Recommended Layout (With Heat Sink)

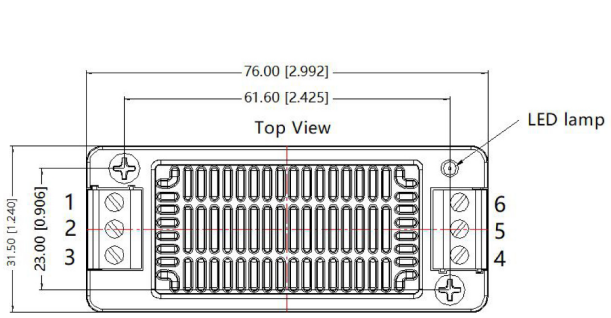


| Pin-Out | | | | | | |
|---|---|---|---|---|---|---|
| Pin | 1 | 2 | 3 | 4 | 5 | 6 |
| Function | Ctrl | GND | Vin | +Vo | 0V | Trim |

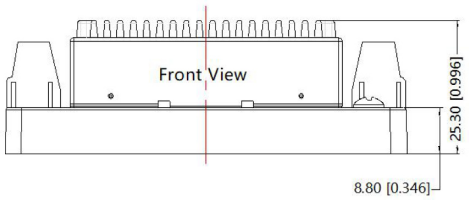


Note:
Unit: mm[inch]
Mounting rail: TS35
Wire range: 24-12 AWG
Tightening torque: Max 0.4 N·m
General tolerances: ±1.00[±0.039]

## Din-Rail mounting - Dimensions and Recommended Layout (With Heat Sink)

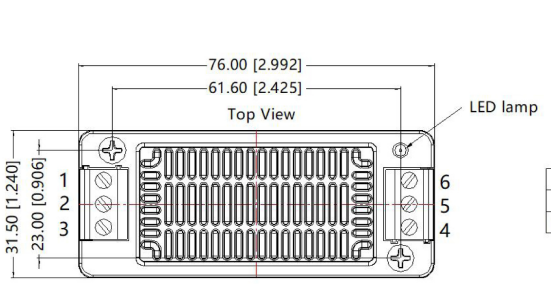


| Pin-Out | | | | | | |
|---|---|---|---|---|---|---|
| Pin | 1 | 2 | 3 | 4 | 5 | 6 |
| Function | Ctrl | GND | Vin | +Vo | 0V | Trim |

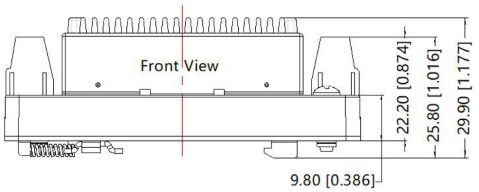


Note:
Unit: mm[inch]
Mounting rail: TS35
Wire range: 24-12 AWG
Tightening torque: Max 0.4 N·m
General tolerances: ±1.00[±0.039]