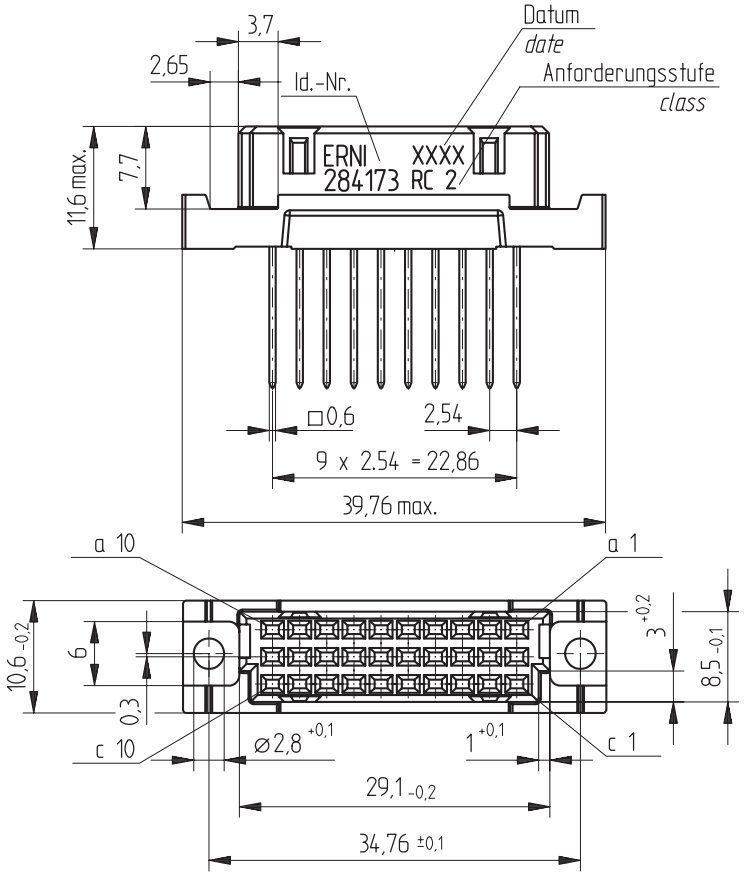

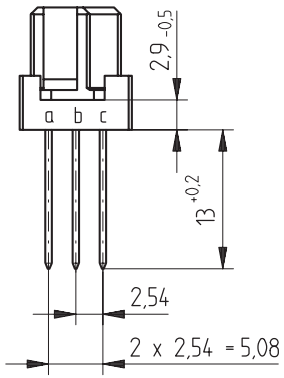

Bestückungsplan / *contact layout*

■ bestückt / *assemble*

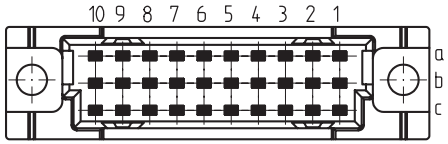

Leiterplatten-Lochbild / *PCB drillhole pattern*

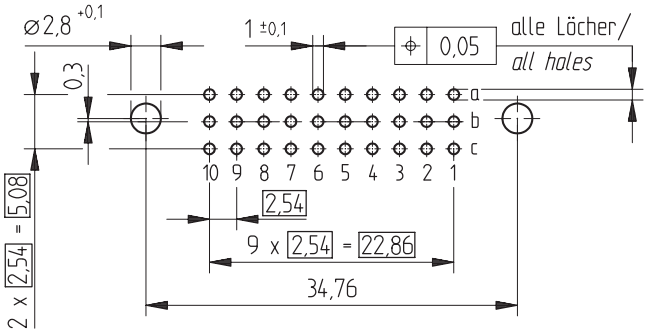

Anschluß 0,6 x 0,6 mm / *terminal 0,6 x 0,6 mm*

Isolierwerkstoff / *housing material* : PBT GF30

Bauart 7 / *type 7*

Anforderungsstufe 2 = 400 Steckzyklen / *performance class 2 = 400 mating cycles*

Fehlende Maße und Angaben nach IEC 60 603-2 / DIN EN 60 603-2

Missing information and dimensions per IEC 60 603-2

Information:	Tolerances — All Dimensions in mm	Scale 2:1	
All rights reserved. Only for information. To insure that this is the latest version of this drawing, please contact one of the ERNI companies before using.	Subject to modification without prior notice. Drawing will not be updated.	Designation: Federleiste C/3, 30 / *Fem. Connector C/3, 30*	
	ERNI www.ERNI.com	284173	1
Index	Date	H:00062238.SZA	STVC/3

Consider protection memo from DIN 34