TOP VIEW

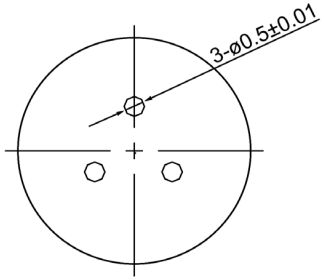

SIDE VIEW

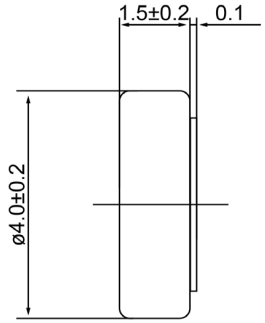

BOTTOM VIEW

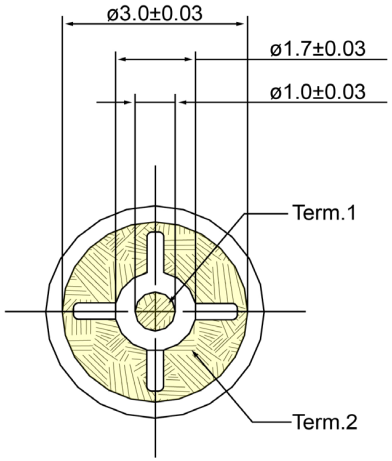

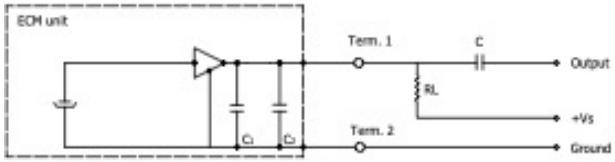

C1 : 10 PF
C2 : 33 PF

Specifications

Description	Value	Unit
Directivity	Omnidirectional	
Technology	Electret Condenser	
Sensitivity	-40	(dB)
Frequency Range	100 ~ 16,000	(Hz)
Rated Voltage	2	(V)
Output Impedance	2,200	(Ohm)
Connection Method	Solderless	
Voltage Range	2 ~ 10	(V)
Max Rated Current	0.5	(mA)
Minimum Signal to Noise Ratio	>60	(dB)
Operating Temperature	-20 ~ +70	°C
Storage Temperature	-40 ~ +85	°C

Notes

1) All dimensions are in mm unless otherwise noted
2) All parts meet RoHS

Revision History

Version	Description	Date	Approved
1	Released from Engineering	10/21/2013	J.S

Drawn by	Date	Checked by	Date	Approved by	Date
A.B.	10/21/2013	C.E.	10/21/2013	J.S	10/21/2013

DB UNLIMITED

Electret Condenser Microphone

MO044002-1

©2013, DB Unlimited