Three-Phase Sine-wave Sensor-Less Fan Motor Driver

CJDR5958 Motor Driver

1 Introduction

CJDR5958 is a three-phase brush-less DC motor drive integrated circuit. It provides a sensor-less speed control scheme and adopts a sine wave signal drive mode, which can better reduce the noise generated during the operation of the motor drive circuit. CJDR5958 internally integrates the starting circuit, back EMF commutation control, pulse width modulation (PWM) speed control, lock protection and thermal shutdown circuit. Therefore, CJDR5958 is very suitable for applications where low motor driving noise is required, such as game machines and CPU cooling devices.

2 Available Package

PART NUMBER	PACKAGE
CJDR5958	DFNWB3×3-10L

Note: For more detailed packaging information, see the part *Pin Configuration and Function* and the part *Mechanical Information*.

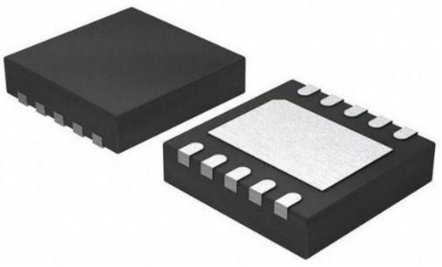

Figure 2-1. DFNWB3×3-10L Package

3 Features

- PWM Quasi-Sinusoidal Driver
- Three-Phase Sensor-Less Drive Method
- Adjustable Forced Commutation Frequency (for Start-up)
- Built-In External PWM Speed Control
- Built-In Quick Start Function
- FG (Rotation Speed Detection) Output
- Soft Switching Circuit (for Noise Reducing)
- Power Saving Function (PWM Duty Input is 0%)
- Built-In Lock Protection and Auto Restart Function
- Thermal Shutdown Protection

4 Applications

- Small Power Fan
- Water Pump
- CPU Water Cooling Pump

5 Pin Configuration and Function

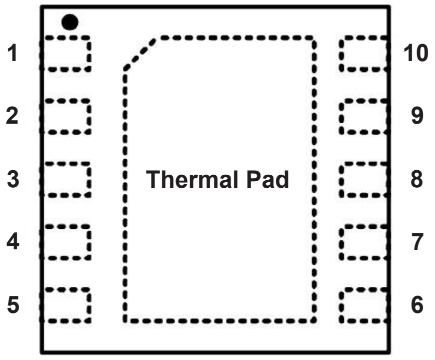

Figure 5-1. DFNWB3×3-10L Package

PIN NAME	CJDR5958 DFNWB3×3-10L	I / O	DESCRIPTION
FG	1	O	Rotation speed output. This is an open-drain out.
COM	2	I	Motor neutral point input.
VCC	3	Power	Supply pin.
UO	4	O	Driver output pin. Output signal for driving motor phase U.
FR	5	I	Motor spin direction control pin. High level: U → V → W (floating). Low level: U → W → V
WO	6	O	Driver output pin. Output signal for driving motor phase W.
VO	7	O	Driver output pin. Output signal for driving motor phase V.
GND	8	Ground	Ground pin.
OSC	9	I / O	Start-up commutation time setting. Connect a capacitor to GND to set start-up commutation time.
PWM	10	I	PWM signal Input pin. Input PWM signal to control rotation speed.
-	Thermal Pad	-	Connected to the GND plane for better power dissipation.

6 Specifications

6.1 Absolute Maximum Ratings(1)

(over operating free-air temperature range, unless otherwise specified)

CHARACTERISTIC	SYMBOL	VALUE	UNIT
Power supply voltage range(2)	V_{CC}	-0.3 ~ 7.0	V
FR pin input voltage range(2)	V_{FR}	-0.3 ~ 7.0	V
UO / VO / WO pin output voltage range(2)	V_{UO} / V_{VO} / V_{WO}	-0.3 ~ 7.0	V
FG output pin voltage range(2)	V_{FG}	-0.3 ~ 7.0	V
Maximum UO / VO / WO output current	I_{UO} / I_{VO} / I_{WO}	1.0	A
FG pin sink current range	I_{FG}	0 ~ 10	mA
Maximum junction temperature	T_J	150	°C
Storage temperature	T_{stg}	-60 ~ 150	°C

(1) Stresses beyond those listed under *Absolute Maximum Ratings* may cause permanent damage to the device. These are stress ratings only, which do not imply functional operation of the device at these or any other conditions beyond those indicated under *Recommended Operating Conditions*. Exposure to absolute-maximum rated conditions for extended periods may affect device reliability.

(2) All voltages are with respect to network ground terminal.

6.2 Recommended Operating Conditions(3)

PARAMETER	SYMBOL	MIN.	NOM.	MAX.	UNIT
Power supply voltage range	V_{CC}	1.8	-	6.0	V
PWM pin input voltage range	V_{PWM}	0	-	V_{CC}	V
UO / VO / WO pin average output current	I_{UO} / I_{VO} / I_{WO}	0	-	500	mA
Operating junction temperature	T_J	-40	-	150	°C
Operating ambient temperature	T_A	-40	-	120(4)	°C

(3) JSCJ recommends that users should not exceed the rated value in the *Recommended Operating Conditions* for the application conditions of the equipment, so as to ensure the stability of normal operation and reliability of long-term operation of the equipment. Operation beyond the recommended rated conditions does not mean that the product will fail. The consumers need to evaluate the risks that may be caused by the operation of the product beyond the recommended rated conditions.

(4) It is necessary to ensure that the operating junction temperature of the equipment does not exceed the rated value of the recommended operating conditions when using the device for design.

6 Specifications

6.3 ESD Ratings

ESD RATINGS		SYMBOL	VALUE	UNIT
Electrostatic discharge(5)	Human body model	$V_{ESD\text{-}HBM}$	3000	V

(5) ESD testing is conducted in accordance with the relevant specifications formulated by the Joint Electronic Equipment Engineering Commission (JEDEC). The human body mode (HBM) electrostatic discharge test is based on the JESD22-114D test standard, using a 100pF capacitor and discharging to each pin of the device through a resistance of 1.5kΩ.

6.4 Electrical Characteristics

CJDR5958 (V_{CC} = 5.0V, T_A = 25°C, unless otherwise specified)

CHARACTERISTIC	SYMBOL	TEST CONDITIONS	MIN.	TYP.(6)	MAX.	UNIT
Supply Current						
Operating current	I_{SS1}	Rotation mode, FR = V_{CC}	-	2.9	4.0	mA
Standby supply current	I_{SS2}	PWM = 0	-	130	180	µA
PWM Control						
PWM high	$V_{PWM\ High}$	Low level to high level	2.5	-	V_{CC} + 0.3	V
PWM low	$V_{PWM\ Low}$	High level to low level	-0.3	-	0.8	V
PWM high input current	$I_{PWM\ High}$	PWM = V_{CC}	-	0	-	µA
PWM low input current	$I_{PWM\ Low}$	PWM = GND	-	2.6	3.0	µA
PWM input frequency	f_{PWM}	-	2.0	-	80	kHz
Oscillator						
OSC high	$V_{OSC\ High}$	-	1.0	1.2	1.4	V
OSC low	$V_{OSC\ Low}$	-	0.5	0.6	0.7	V
OSC charge current	I_{OSC1}	V_{OSC} = 0V	-	16.5	-	µA
OSC discharge current	I_{OSC2}	V_{OSC} = 1.2V	-	16.5	-	µA
Output Drivers						
Output driver saturation voltage	V_{OUT}	I_{OUT} = 250mA, upper and lower total	-	0.30	0.44	V
FG low	V_{FG}	I_{FG} = 5mA	-	0.2	0.3	V
FG leak current	I_{FGL}	V_{FG} = 7.0V	-	-	10	µA
FR input high threshold voltage	V_{FRH}	-	0.5 × V_{CC}	-	V_{CC}	V
FR input low threshold voltage	V_{FRL}	-	0	-	0.1 × V_{CC}	V

6 Specifications

6.4 Electrical Characteristics (continued)

CJDR5958 (V_{CC} = 5.0V, T_A = 25°C, unless otherwise specified)

CHARACTERISTIC	SYMBOL	TEST CONDITIONS	MIN.	TYP.(6)	MAX.	UNIT
Lock Protection						
Lock detection on time	t_{ON}	-	1.1	1.3	1.5	s
Lock detection off time	t_{OFF}	-	6.2	6.6	7.5	s
Thermal Shutdown Protection						
Thermal shutdown	T_{SD}	-	-	165	-	°C
Thermal shutdown hysteresis	ΔT_{SD}	-	-	30	-	°C
Quick Start						
Quick start enable time	t_{QS}	-	-	16	-	ms

(6) Typical numbers are at 25°C and represent the most likely norm.

6.5 Thermal Information

THERMAL METRIC(7)		SYMBOL	CJDR5958	UNIT
			DFNWB3×3-10L	
Thermal resistance	Junction-to-ambient	$R_{\Theta JA}$	63.3	°C/W
	Junction-to-case	$R_{\Theta JC}$	30.2	
Reference maximum power dissipation for continuous operation		$P_{D\ Ref}$	1.97	W

(7) The value of thermal metric is measured with the device mounted on 1 in^2 FR-4 board with 2oz. Copper, in a still air environment with T_A = 25°C.

7 Detailed Description

7.1 Description

CJDR5958 is a three-phase brush-less DC motor drive integrated circuit. It provides a sensor-less speed control scheme and adopts a sine wave signal drive mode, which can better reduce the noise generated during the operation of the motor drive circuit. CJDR5958 internally integrates the starting circuit, back EMF commutation control, pulse width modulation (PWM) speed control, lock protection and thermal shutdown circuit.

7.2 Functional Block Diagram

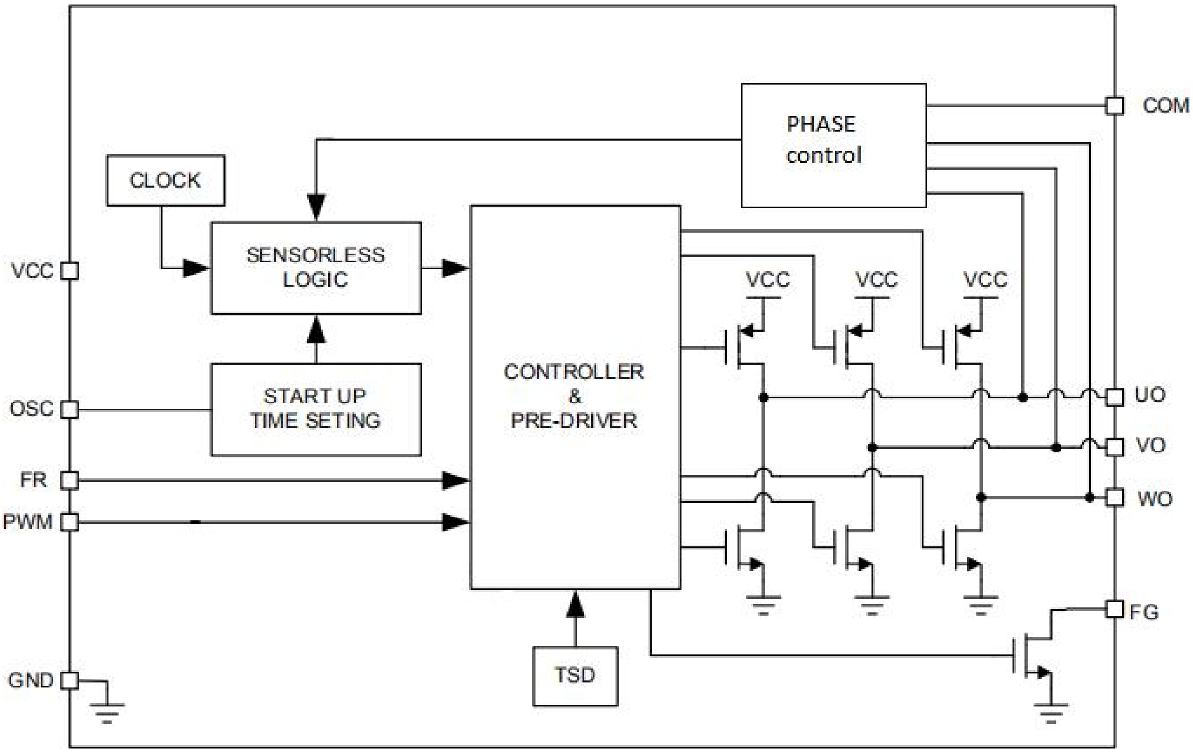
PHASE control
COM
CLOCK
SENSORLESS LOGIC
VCC
VCC
VCC
VCC
START UP TIME SETING
CONTROLLER & PRE-DRIVER
OSC
UO
VO
FR
PWM
WO
FG
TSD
GND

7.3 Function Description

PWM Speed Control (Fixed-frequency Output)

It is possible to change rotation speed of the motor by switching output transistor. The on-duty of switching depends on the signal from input to PWM terminal. The output PWM frequency is fixed to 22kHz typically. As shown in Figure 7-1.

FG Output

The FG pin is an open-drain output, connecting a pull up resistor to a high level voltage for the speed detection function. The FG output signal is asynchronous with driver output for stable output frequency.

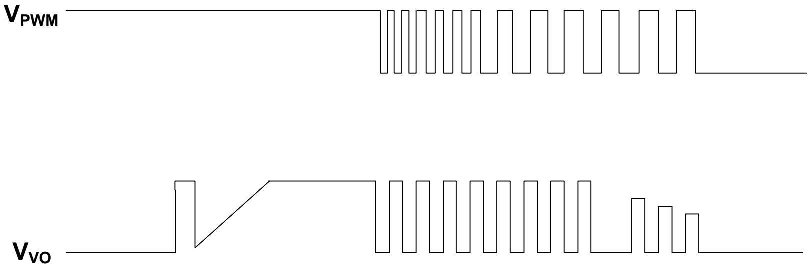

Figure 7-1. PWM Input Waveform

7 Detailed Description

7.3 Function Description (continued)

Quick Start

This IC disables the lock protection function when the PWM input keeps low level for more than 16ms. As shown in Figure 7-2.

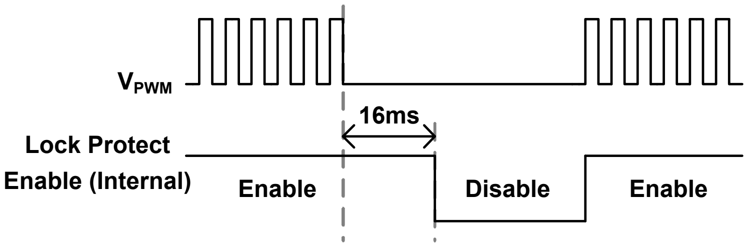

Figure 7-2. Quick Start Waveform

Soft Switch (Sine-wave Output)

The is a soft switch function to make phase current be come smooth, which can reduce the noise of motoring switching interval. Using PWM duty cycle control to create the sinusoidal current waveform. BEMF detection window is opened on phase W in order to measure the rotor position so as to define the modulation timing close to the ideal sine wave output. As shown in Figure 7-3.

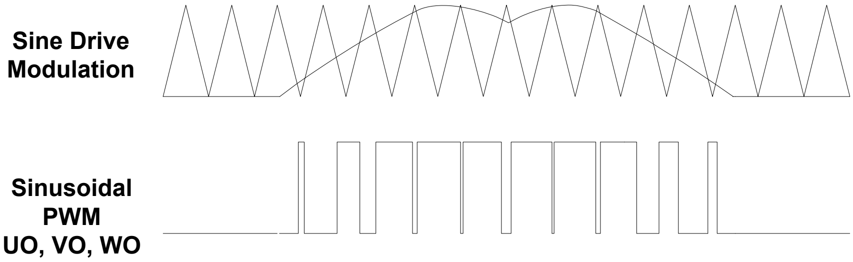

Figure 7-3. Sinusoidal PWM

Lock Protection and Automatic Restart

The CJDR5958 provides the lock protection and automatic restart functions to prevent the coil burnout while the fan is locked. As the fan is locked, the IC will come into start up operation for 1.3s (Typ.). Then, the IC will switch to lock protection mode to turn off output driver for 6.6s (Typ.). After lock protection mode, the IC switches to start-up operation again. If the locked condition still remains, the lock-and-restart process will be recurred until the locked condition is released.

Thermal Shutdown Protection

The CJDR5958 has thermal protection. When internal junction temperature reaches 165°C, the output devices will be switched off. When the IC's junction temperature cools down 30°C, the thermal sensor will turn on the output devices again, resulting in a pulsed output during continuous thermal protection.

8 Application and Implementation

8.1 Typical Application Circuit

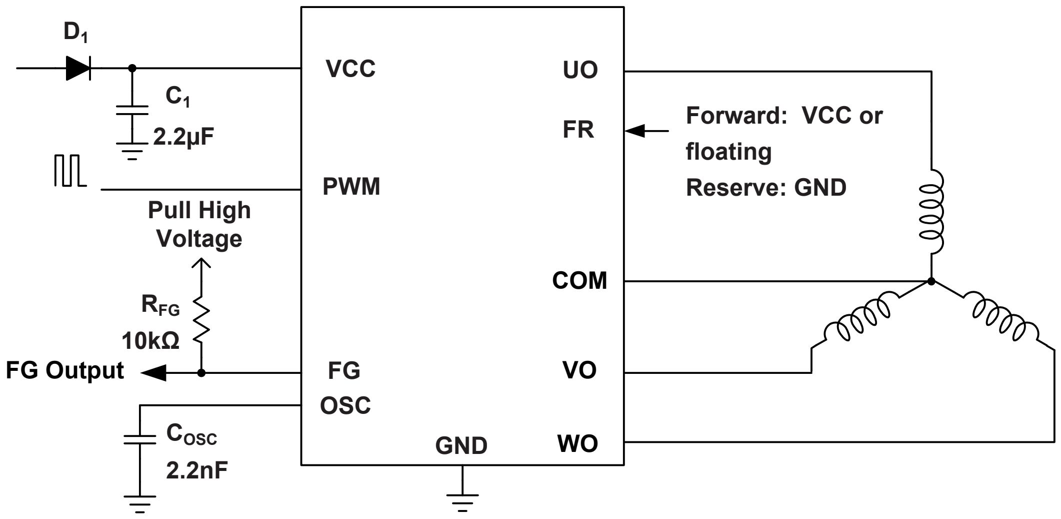

8.2 Application Information

Input Protection Diode & Capacitor

It is necessary to add a protection diode (D_1) to prevent the damage from the power reverse connection. However, the protection diode will cause a voltage drop on the supply voltage. The current rating of the diode must be larger than the maximum output current. For the noise reduction purpose, a capacitor (C_1) is connected between VCC and GND. (see *Typical Application Circuit*) It's suggested that C_1 should be placed as close as possible in the VCC pin.

OSC Capacitor

The capacitor connects from OSC pin to GND can be determined the frequency of force commutation. The optimal design of the frequency could make sure the motor start-up in succeed. Its capacitance from 1000pF to 3300pF is recommended.

FG Resistor

The value of FG resistor could be decided by the following equation:

$$R_{FG} = \frac{V_{CC} - V_{FG/RD}}{I_{FG/RD}}$$

For example, $V_{CC} = 5.0V$, $I_{FG} = 5mA$, $V_{FG} = 0.2V$, $R_{FG} = 0.96k\Omega$, the value of resistor in the range of 1kΩ to 10kΩ is recommended.

NOTE

The application information in this section is not part of the data sheet component specification, and JSCJ makes no commitment or statement to guarantee its accuracy or completeness. Customers are responsible for determining the rationality of corresponding components in their circuit design and making tests and verifications to ensure the normal realization of their circuit design.

9 Mechanical Information

DFNWB3×3-10L Mechanical Information

DFNWB3×3-10L Outline Dimensions

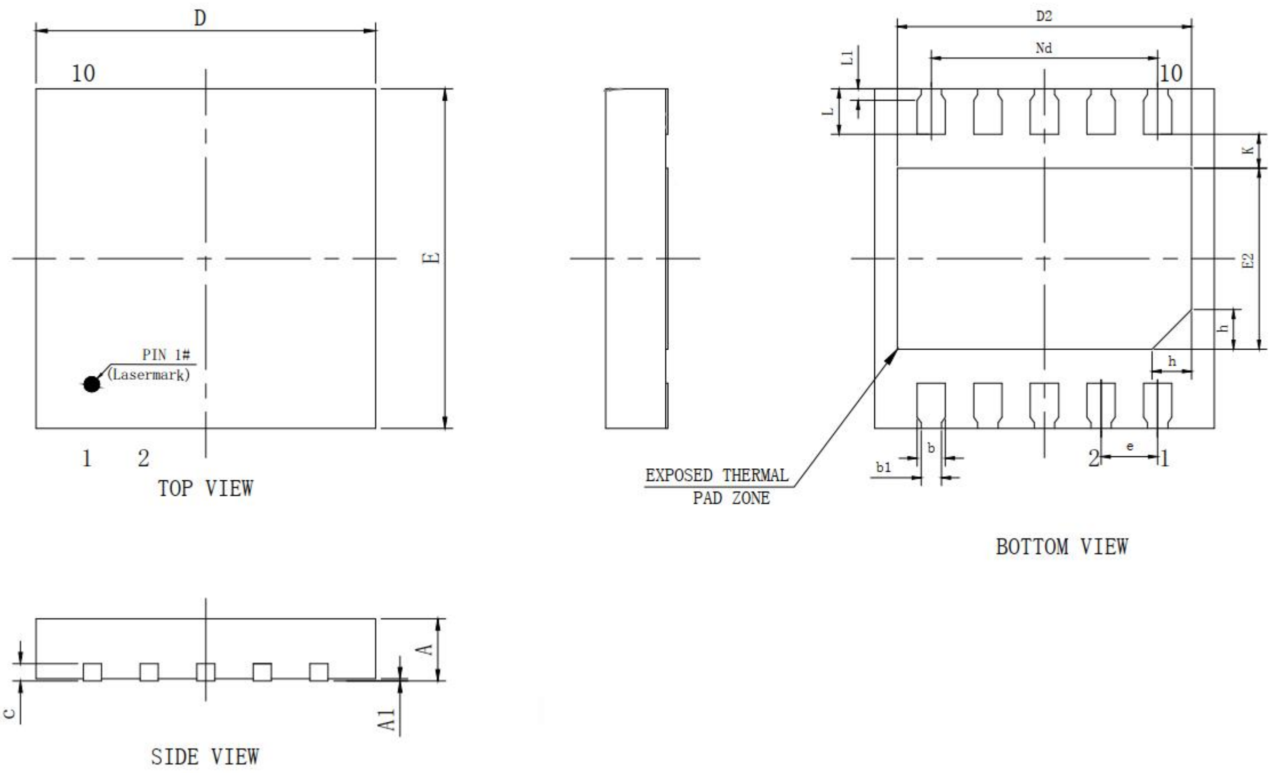
D
10
E
PIN 1#
(Lasermark)
1
2
TOP VIEW
D2
Nd
L1
L
10
K
E2
h
h
b
b1
e
2
1
EXPOSED THERMAL
PAD ZONE
BOTTOM VIEW
A
c
A1
SIDE VIEW

SYMBOL	DISMENSIONS IN MILLIMETERS			DISMENSIONS IN INCHES		
	MIN	NOM	MAX	MIN	NOM	MAX
A	0.500	0.550	0.600	0.020	0.022	0.024
A1	-	0.020	0.050	-	0.001	0.002
b	0.180	0.250	0.300	0.007	0.010	0.012
b1	0.180 REF.			0.007 REF.		
c	0.152 REF.			0.006 REF.		
D	2.900	3.000	3.100	0.114	0.118	0.122
D2	2.500	2.600	2.700	0.098	0.102	0.106
E	2.900	3.000	3.100	0.114	0.118	0.122
E2	1.500	1.600	1.700	0.059	0.063	0.067
e	0.500 BSC.			0.020 BSC.		
h	0.200	0.250	0.300	0.008	0.010	0.012
K	0.250	0.300	0.350	0.010	0.012	0.014
L	0.300	0.400	0.500	0.012	0.016	0.020
L1	0.100 REF.			0.004 REF.		
NA	-			-		
Nd	2.000 BSC.			0.079 BSC.		

10 Notes and Revision History

10.1 Associated Product Family and Others

To view other products of the same type or IC products of other types, click the official website of JSCJ -- https: ***www.jscj-elec.com*** for more details.

10.2 Notes

Electrostatic Discharge Caution

This IC may be damaged by ESD. Relevant personnel shall comply with correct installation and use specifications to avoid ESD damage to the IC. If appropriate measures are not taken to prevent ESD damage, the hazards caused by ESD include but are not limited to degradation of integrated circuit performance or complete damage of integrated circuit. For some precision integrated circuits, a very small parameter change may cause the whole device to be inconsistent with its published specifications.

10.3 Revision History

October, 2023: changed from rev - 1.1 to rev - 1.2:

- Page 9, Mechanical Information, updated packaging dimensions.

October, 2023: changed from rev - 1.0 to rev - 1.1:

- Page 5, Thermal Information, added junction-to-case thermal resistance;
- Page 7, Function Description, typical output PWM frequency changed from 30kHz to 22kHz.

October, 2022: released CJDR5958 rev - 1.0.

DISCLAIMER

IMPORTANT NOTICE, PLEASE READ CAREFULLY

The information in this data sheet is intended to describe the operation and characteristics of our products. JSCJ has the right to make any modification, enhancement, improvement, correction or other changes to any content in this data sheet, including but not limited to specification parameters, circuit design and application information, without prior notice.

Any person who purchases or uses JSCJ products for design shall: 1. Select products suitable for circuit application and design; 2. Design, verify and test the rationality of circuit design; 3. Procedures to ensure that the design complies with relevant laws and regulations and the requirements of such laws and regulations. JSCJ makes no warranty or representation as to the accuracy or completeness of the information contained in this data sheet and assumes no responsibility for the application or use of any of the products described in this data sheet.

Without the written consent of JSCJ, this product shall not be used in occasions requiring high quality or high reliability, including but not limited to the following occasions: medical equipment, military facilities and aerospace. JSCJ shall not be responsible for casualties or property losses caused by abnormal use or application of this product.

Official Website: www.jscj-elec.com

Copyright © JIANGSU CHANGJING ELECTRONICS TECHNOLOGY CO., LTD.