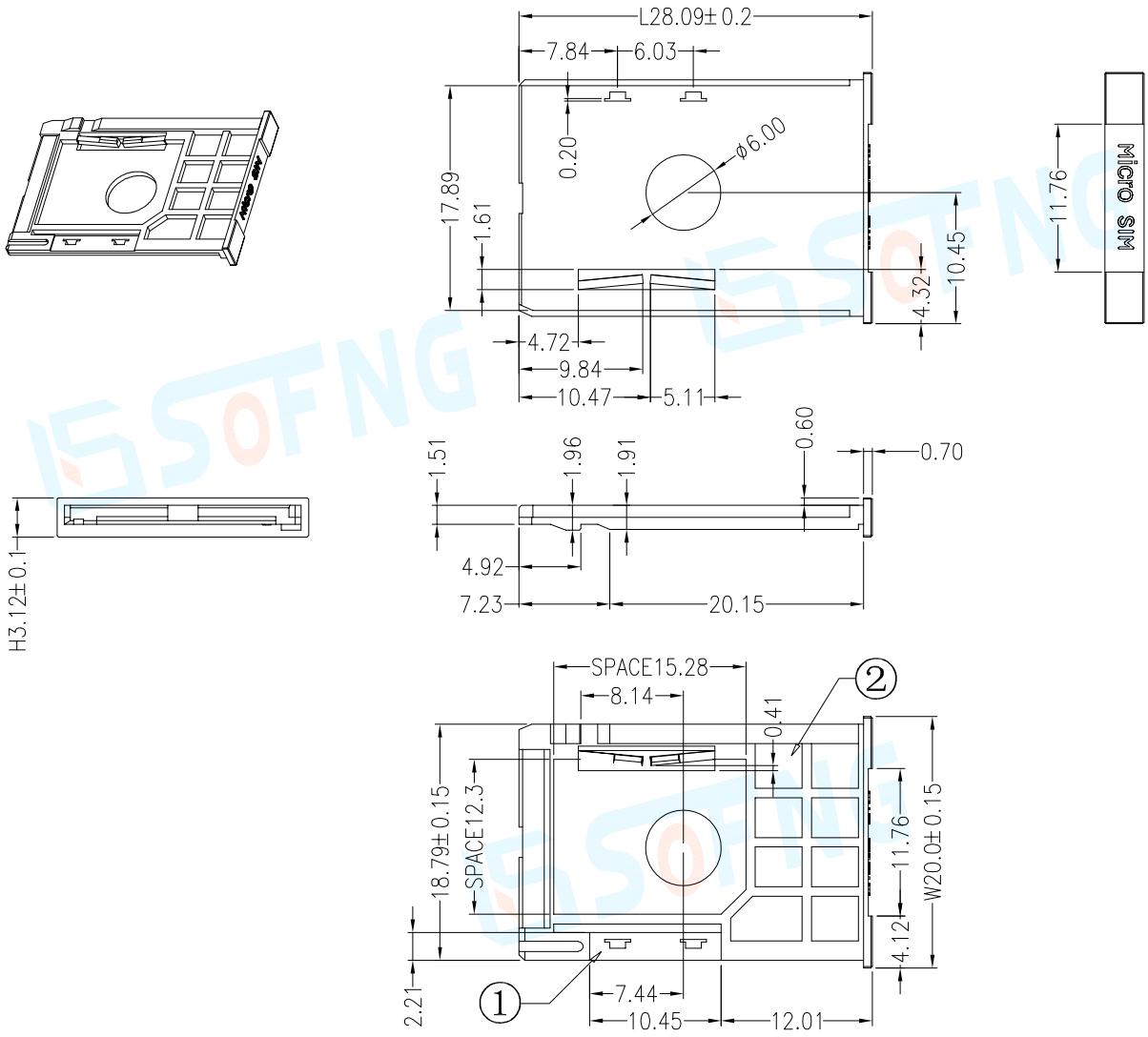

No.	NAME	MATERIAL
①	卡托端子 TERMINAL	PHOSPHOR BROMZE(T=0.15mm)磷青銅
②	卡托本体 COVER	PBT+30%G.F (Black)塑膠

SPECIFED TOLERANCES
UNLESS OTHERWISE

DECIMALS	ANGLES
X. :±0.50	X :±3°
X.X :±0.35	X.X :±1°
X.XX :±0.15	