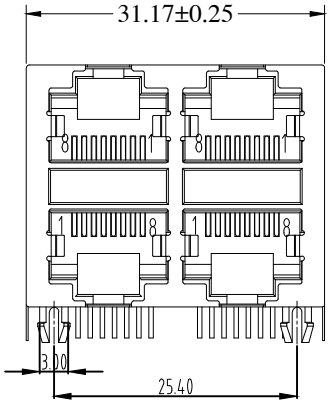

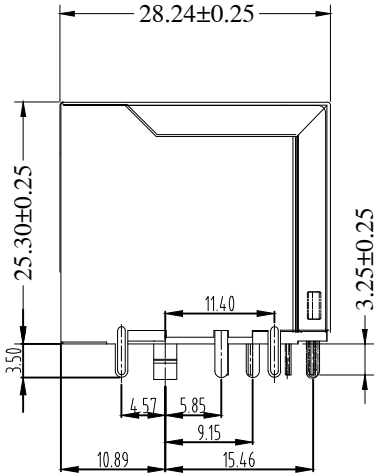

MATERIAL:

HOUSING:PA46,PBT,PA66,BLACK.
TERMINAL: PHOSPHOR BRONZE Ø0.46MM
GOLD PLATING

SHIELD:C2680,T=0.20MM, 20 MIN NICKEL PLATING
NO ALL AREA

DURABILITY: 750 CYCLES MIN,12.5MM/MINUTE.
INSERTION FORCE: 2.2KG.F MAX.
RETENTION STRENGTH : 7.7KG.F BETWEEN JACK AND PLUG.
OPERATING TEMPERATURE: -40°C~+85°C.
STORAGE TEMPERATURE: -40°C~+85°C.
ALL CRITICAL DIMENSIONS WITH "*"

VOLTAGE: 125 VOLTS AC.
CURRENT RATING : 1.5AMP.
DIELECTRIC STRENGTH: 1000 VAC RMS 50HZ OR 60HZ,1MIN.
INSULATION RESISTANCE: 500 MEGA OHMS MIN. INITIAL
AFTER 500V DC FOR 1 MINUTE.
CONTACT RESISTANCE: SINGLE TERMINAL 30 MILLIOHMS MAX.
INITIAL 50 MILLIOHMS MAX. AFTER
DURABILITY TEST.

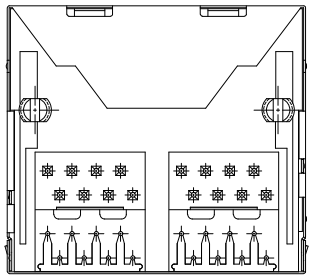

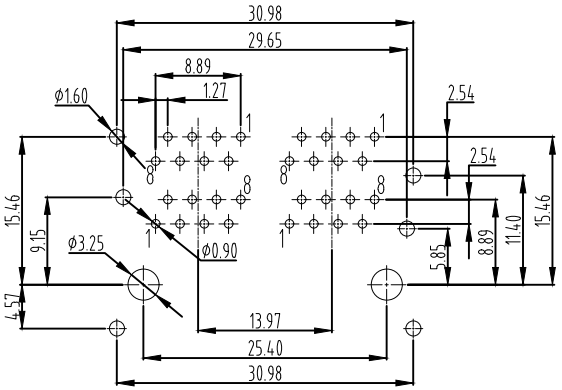

PCB LAYOUT/TOP VIEW

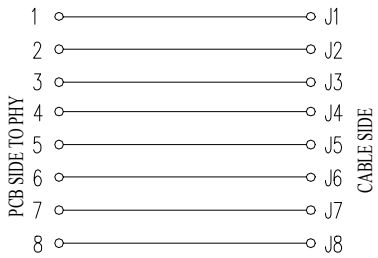

			GENERL TOLERANCE	制 图 DRAWING		深圳市华灿天禄电子有限公司 ShenzhenhuacantianluELECTRONICS CO.,LTD		
			DIM TOL	审 核 CHECK				
			X.X ±0.30	批 准 APPROVAL		产品名称 TITLE	网络插座（无灯无弹）	版 本 REV. A
1	初版发行		X.XX ±0.20	比 例 SCALE		产品料号 PART NO.	HC-RJ45-059C-2*2-4	单 位 UNITS mm
序号 No.	变更内容 MODIFY CONTENT	日 期 MODIFY DATE	X.XXX ±0.10	投 影 Projection		材 料 MATERIAL		页 次 SHEET 1/1
			Angle ±3.0°					