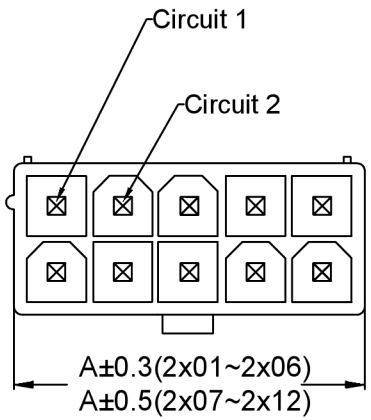

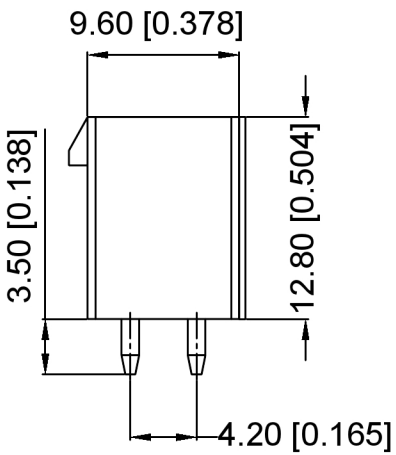

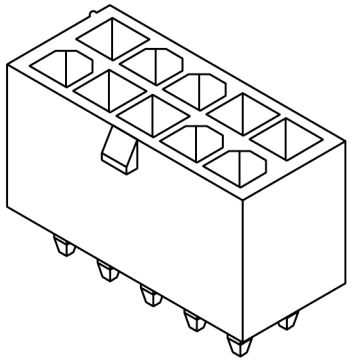

Specifications:
规格：
Voltage rating:600V AC/DC
额定电压：600V AC/DC
Current rating:9A AC/DC
额定电流：9A AC/DC
Withstanding voltage:1500V AC/minute
耐受电压：1500V AC/分钟
Temperature range:-25℃-+85℃
温度范围：-25℃-+85℃
Insulation resistance:≥100MΩ
绝缘电阻：≥100MΩ
Contact resistance:≤10mΩ
接触电阻：≤10mΩ
After environmental testing:≤20mΩ
环境测试后：≤20兆欧

X9357 W V- 2xXX - N2 SN
① ② ③ ④ ⑤ ⑥

1.Series No.
2.Category:W-Wafer
3.Welding Board Angle: V- Stright 180°
4.Row No.Pin No:2xXX-2x01P~2x12P
5.Material: N0-PA66 94V-0:N2-PA66 94V-2
6.Plating Category: SN-Bright Tin Plating
V01-Plating Gold Flash

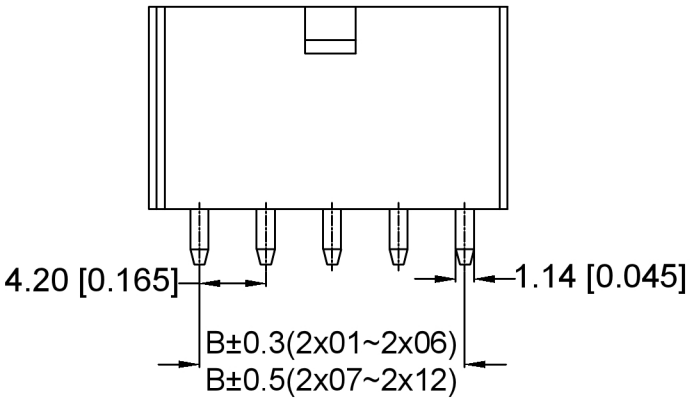

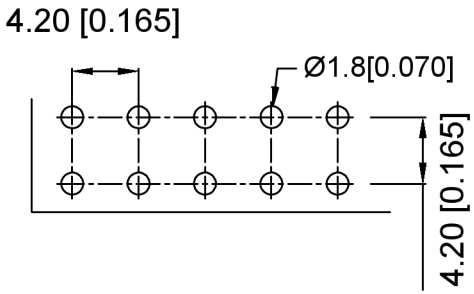

Recommended P.C.B Layout

Poles	Dimensions(mm)		Poles	Dimensions(mm)	
	A	B		A	B
2*01	5.40	–	2*07	30.60	25.20
2*02	9.60	4.20	2*08	34.80	29.40
2*03	13.80	8.40	2*09	39.00	33.60
2*04	18.00	12.60	2*10	43.20	37.80
2*05	22.20	16.80	2*11	47.40	42.00
2*06	26.40	21.00	2*12	51.60	46.20

X9357WV-2xXX-N2SN	PA66 UL94V-2	Brass	X9357HM
PART NO	Material	Material(Pin)	Suitable XKB Housing

广东星坤科技股份有限公司
文件工程章

MARK	DESCRIPTION	DATE	REVISED	APPROVED
Δ4		日		
Δ3		期		
Δ2				

REVISIONS

www.helloxkb.com

XKB		
ANGLAR		±5°
L≤4		±0.2
4<L≤16		±0.3
16<L≤63		±0.4
L>63		±0.5

UNSPECIFIED TOLERANCES

DSND		DATE		SCALE: N/A	MODEL TYPE: 4.2 mm Crimp Style Connectors
DWN		DATE		VIEW:	PART NO.: X9357WV-2xXX-N2SN
CHKD		DATE		UNIT: mm/in	DWG NO.: X-X9357WV-2xXX-N2SN
APPD		DATE		SIZE: A4	

XKB INDUSTRIAL PRECISION CO.,LIMITED

WEIGHT	SHEET	REVISION
1.0g	1/1	A0