DWG. NO. SW-1421-A REV. "A"

P/N: RTS-1105C-NL

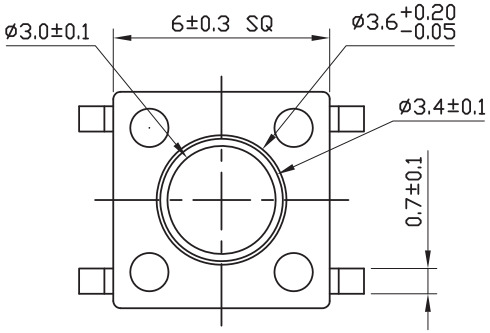

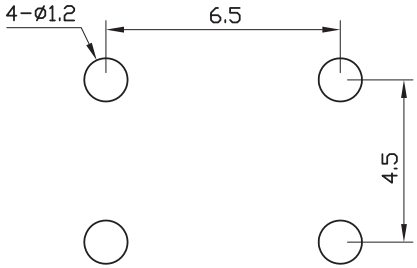

PCB LAYOUT

SCHEMATIC

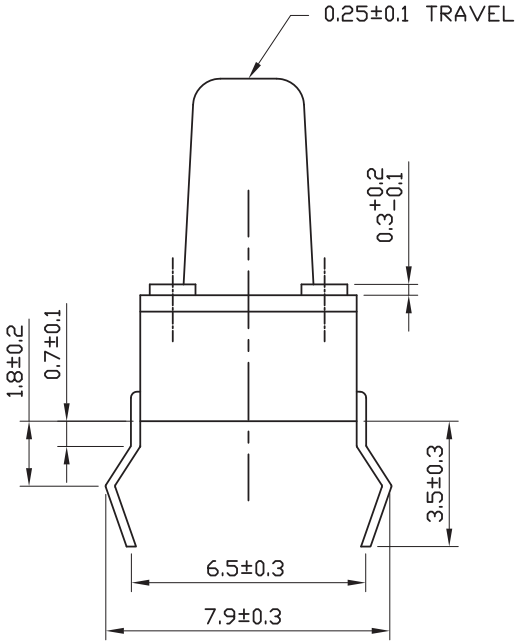

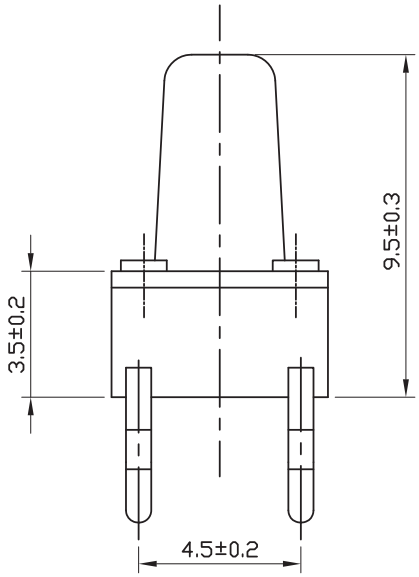

SPECIFICATION:
ELECTRICAL
1. RATING: DC 12V, 50mA. MAX.
2. CONTACT RESISTANCE: 100mΩ MAX. UNDER THE DC 5V, 1A
3. INSULATION RESISTANCE: 100MΩ MIN AT DC 100V
4. WITHSTANDING VOLTAGE: AC 250V, FOR 1 MINUTE.
5. BOUNCE: 10msec. MAX
MECHANICAL
1. SWITCH ACTION: S.P.S.T.
2. OPERATING FORCE: 120±50gf
3. CONTROL STRENGTH: 1Kgf STATIC FORCE
DURABILITY
1. TEST CONDITIONS: 1100,000~500,000 CYCLES AT A RATE OF 15~20 CYCLES FOR 1 MINUTE WITH A RESISTIVE LOAD DC 12V, 50mA
2. CONTROL RESISTANCE: 200mΩMAX.
3. BOUNCE: 20msec. MAX.
4. OPERATING FORCE: WITHIN +10%~-20% OF INITIAL VALUE

NOTE:
ALL DIMS ARE GIVEN IN MM.

PROJECTION	RDI Research • Development • Innovation RDI, Inc. • 400 Columbus Avenue • Valhalla, NY 10595			
SCALE NONE	TITLE TACT SWITCH-RoHS COMPLIANT			
TOLERANCE EXCEPT AS NOTED	DR. JOEY	DATE 7/23/03	REF. RTS-1105C-NL	
DEC. INCHES N/A	CK. SL	PRE- SW	DRAWING NO. 1421	SIZE A / REV. A
DEC. MILLIMETERS ±0.3	THIS DOCUMENT IS OWNED BY, AND THE INFORMATION CONTAINED IN IT IS PROPRIETARY TO, RDI, BY RECEIPT HEREOF THE HOLDER AGREES NOT TO USE THE INFORMATION AND NOT TO DISCLOSE IT TO ANY THIRD PARTY, NOR REPRODUCE THIS DOCUMENT WITHOUT THE WRITTEN CONSENT OF RDI, AND AGREES TO RETURN THIS DOCUMENT FORTHWITH UPON REQUEST.			
ANG. ±3°				

ECN#	DATE	SYM	REVISION RECORD	AUTH	BY
06-267	04/12/06	A	CHANGED THE PART TO RoHS COMPLIANT	VC	JY