© – TE Connectivity. All Rights Reserved.

REVISIONS					
P	LTR	DESCRIPTION	DATE	DWN	APVD
	F1	REDRAWN – 0K40-0364-03	05MAY03	JRB	KLC
	F2	REVISED PER ECO-20-012742	15SEP20	AP	AH

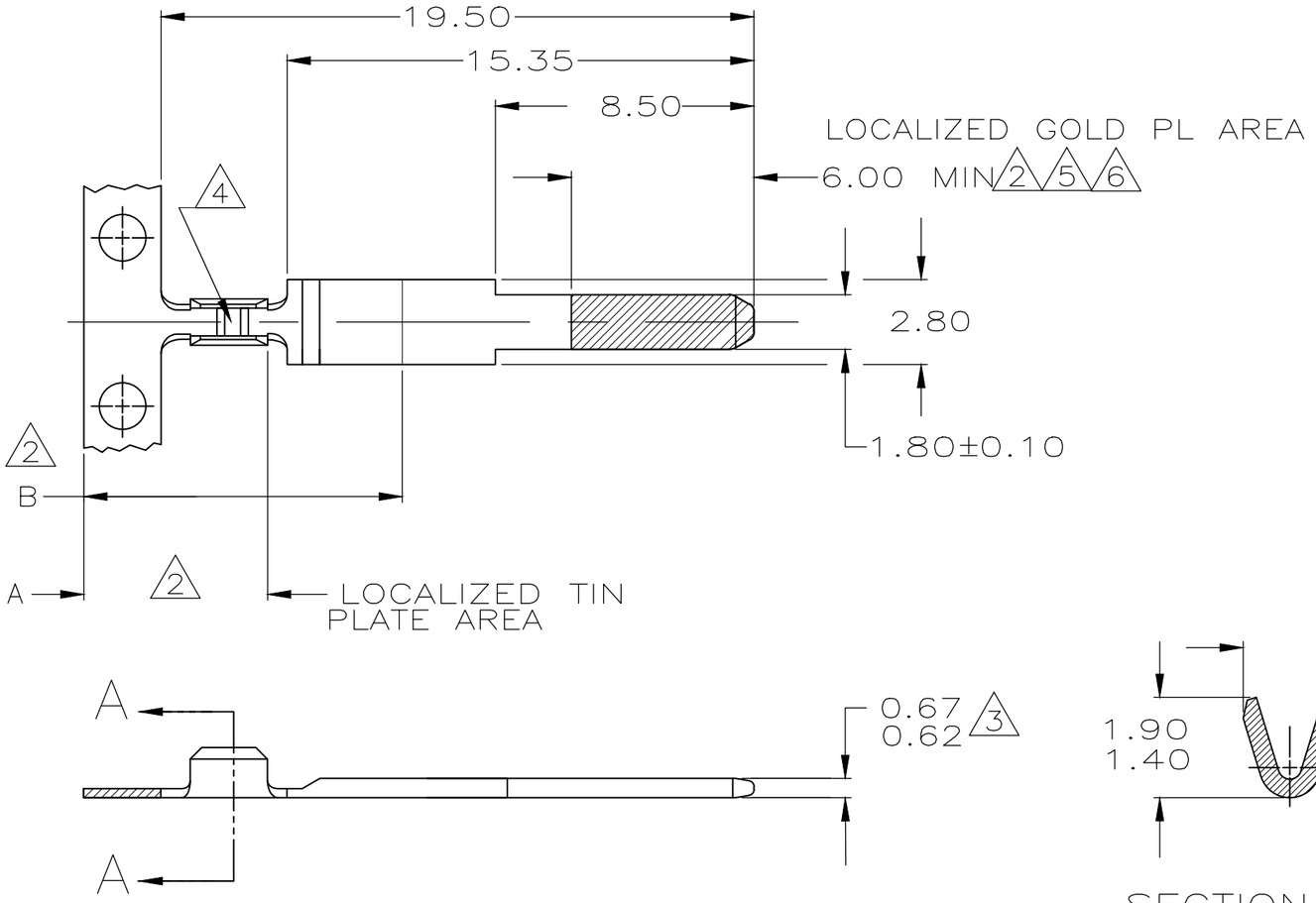

SECTION A–A
SCALE 10:1

1 CONTINUOUS STRIP ON REELS

2 FINISH: PLATE 0.00076 MIN THK GOLD IN LOCALIZED GOLD PLATE AREA AND PLATE 0.0025 TO 0.0076 TIN IN LOCALIZED TIN PLATE AREA ALL OVER 0.00200 MIN THK NICKEL.

3 INCLUDES PLATING THICKNESS.

4 TWO WIRE CRIMP SERRATIONS LOCATED IN THIS AREA.

5 DIM 6.0 POINT OF PLATING MEASUREMENT.

6 NO POST PLATING TOOL MARKS PERMITTED IN THIS AREA

7 FINISH: 0.0038 TO 0.0076 TIN OVER 0.00127 MIN NICKEL.

	REELING DIRECTION	Sn PLATING LOCATION	FINISH	MATERIAL	WIRE SIZE	PART NO.
	107-3 FIG. 73	B=10.75	2	SAE CA 260 TEMP 2 BRASS	#30 SOLID	55931-4
OBSOLETE	~~107-3 FIG. 72~~	~~TOTAL~~	~~7~~	~~SAE CA 260 TEMP 2 BRASS~~	~~#30 SOLID~~	~~55931-3~~
	107-3 FIG. 72	A=6.1	2	SAE CA 260 TEMP 2 BRASS	#30 SOLID	55931-1

THIS DRAWING IS A CONTROLLED DOCUMENT.

DIMENSIONS: mm [INCHES]

TOLERANCES UNLESS OTHERWISE SPECIFIED:
0 PLC ± –
1 PLC ± 0.3
2 PLC ± 0.13
3 PLC ± –
4 PLC ± –
ANGLES ± –

MATERIAL: SEE TABLE

FINISH: SEE TABLE

DWN JR RUTH 4/21/93
CHK P.A. COON 4/21/93
APVD — 4/21/93 P.A. COON
PRODUCT SPEC — 4/21/93 C.R. RHOADS
APPLICATION SPEC —
WEIGHT 0.000000

TE Connectivity

NAME: ECT/ACT 1.8 X 0.64 SENSOR TAB
–
–

SIZE	CAGE CODE	DRAWING NO	RESTRICTED TO
A3	00779	C-55931	—

CUSTOMER DRAWING

SCALE 5:1 | SHEET 1 OF 1 | REV F2