HAOYU

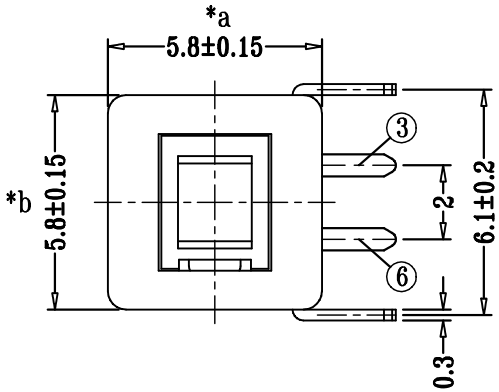

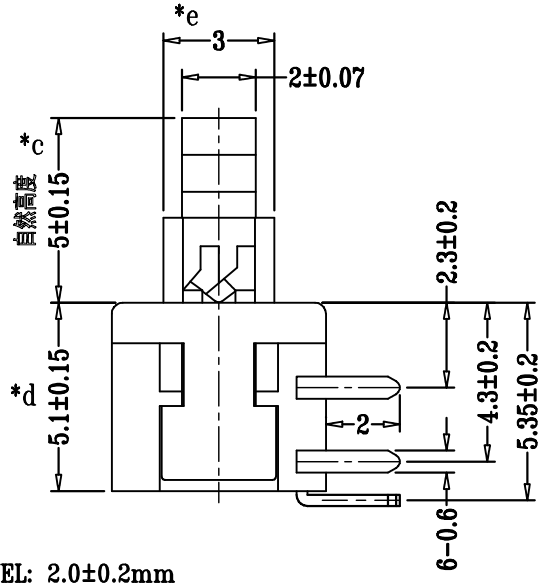

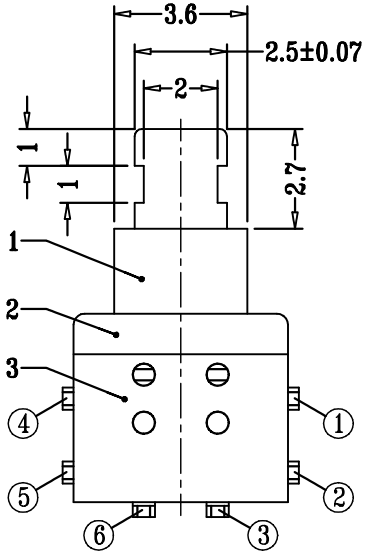

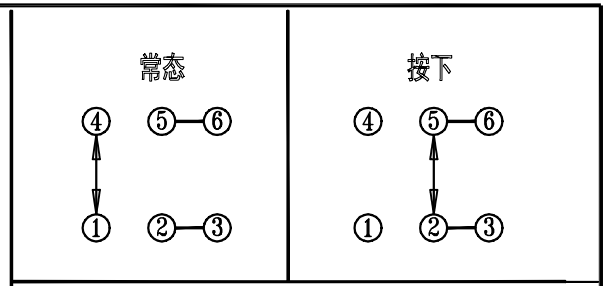

SCHEMATIC (NON-SHORTING)

常态：①与④导通，②与③导通，⑤与⑥导通，
其余端子相互之间断开；

按下：②、③、⑤、⑥4个端子导通，
其余端子相互之间断开。

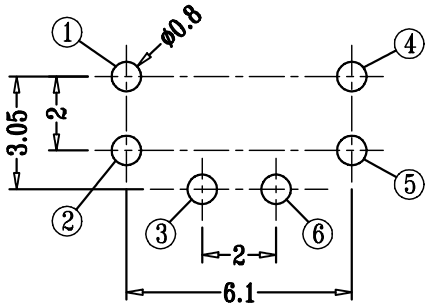

P.C.B layout (Pattern Side)

TOTAL TRAVEL: 2.0±0.2mm

COMDUCTION STROKE: 0.95±0.05mm

NO.	PART NAME	MATERIAL	QTY	FINISHING
5				
4	SPRING	SUS	1	NATURAL
3	CASE	PPA/BRASS STRIP	1	BLACK/Ag PLATED
2	COVER	PPA	1	BLACK
1	KNOB	PPA/PBS C5210R-EH	1	WHITE/Ag CLAD

TOLERANCE UNLESS SPECIFIED
UP TO 5mm: ±0.1
ABOVE 5mm: ±0.2
ANGULAR ±1°

A0

NO	DATE	REVISION	DWN	BY	APPD

TITLE: PUSH SWITCH
MODEL: PB-22E77-N-00 200+/-50GF
UNIT : MM
SCALE: 1:1
ROHS COMPLIANT

DWN
CHK'D
APPD
PRO.AGL:
REV :A0

皓宇 HOOYA
DONGGUANG HAOYU ELECTRONICS CO., LTD
东莞市弘皓电子有限公司