REV.	DESCRIPTION OF REVISIONS	APPR.	CHKD.	DRAW.	DATE
1	NEW			Henry	2020/06/08
2	Original Model M6102-1			Henry	2023/10/24

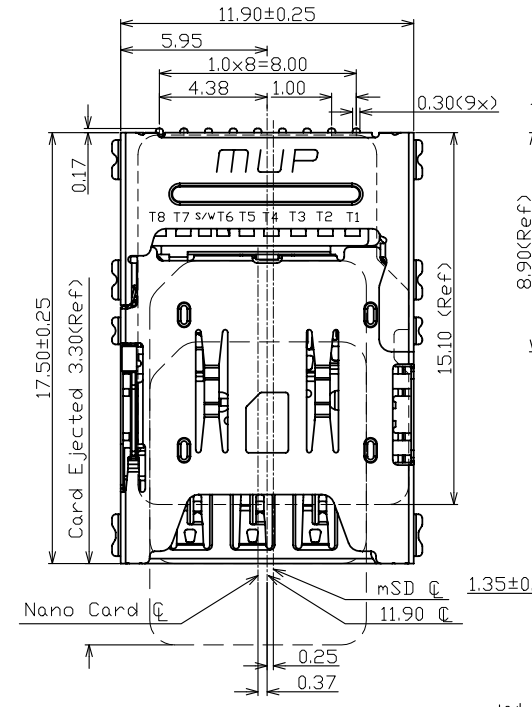

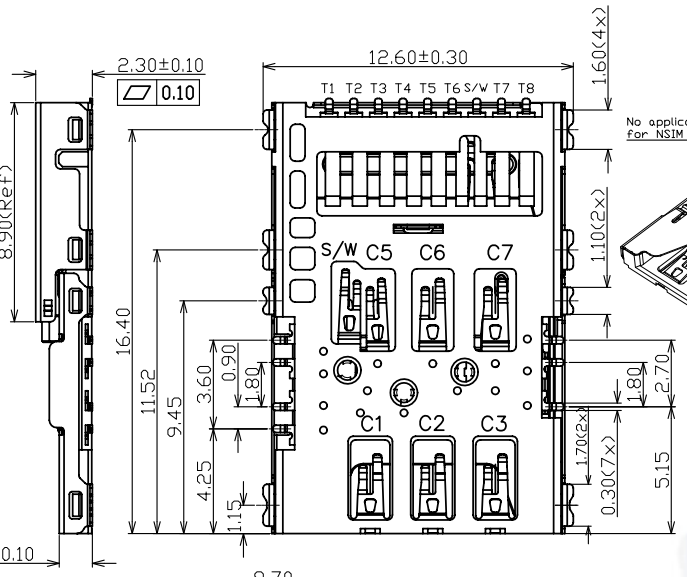

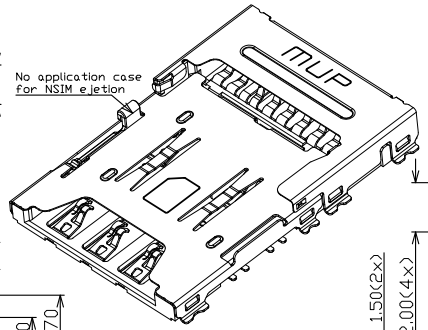

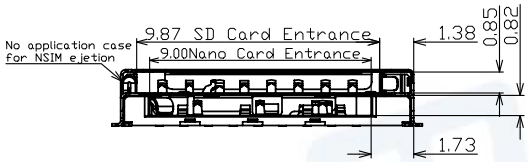

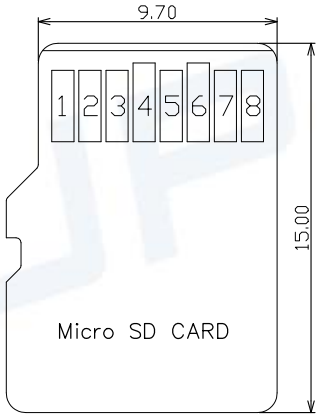

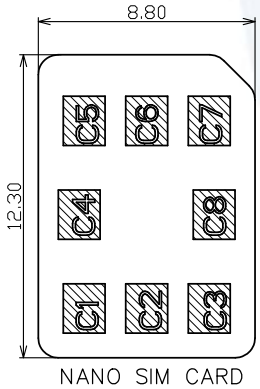

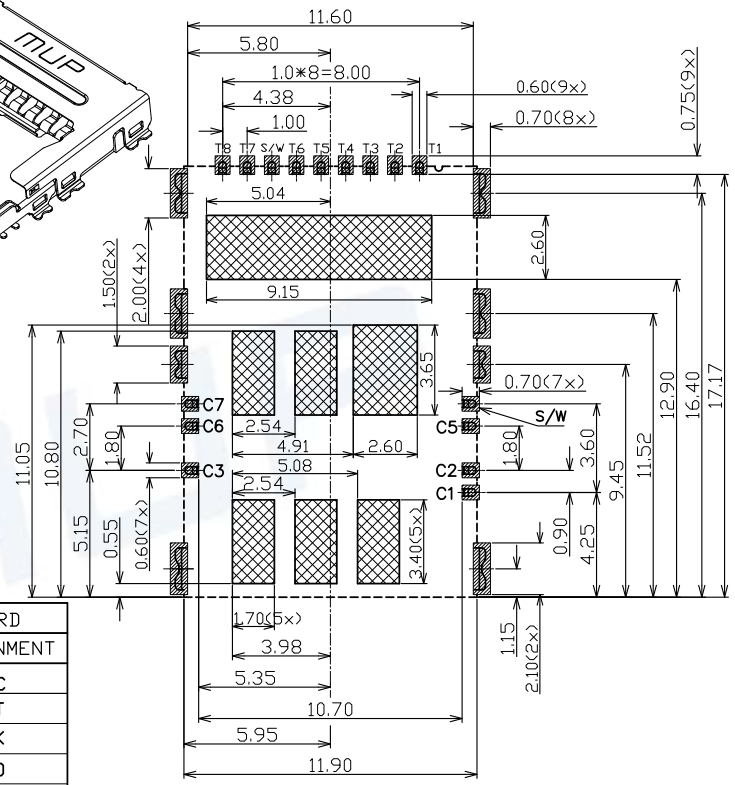

RECOMMENDED P.C.B LAYOUT
COMPONENT SIDE(TOLERANCE ±0.05)
PAD AREA
CONNECTOR OUTLINE
NO PATTERN AND VIA HOLE IN THIS AREA

NANO SIM CARD	
PIN No.	ASSIGNMENT
C1	VCC
C2	RST
C3	CLK
C5	GND
C6	VPP
C7	I/O
s/w	CARD DETECION

MICRO SD CARD		PIN No.	ASSIGNMENT
PIN No.	ASSIGNMENT	5	CLK
1	DAT2	6	VSS(GND)
2	CD/DAT3	7	DAT0
3	CMD	8	DAT1
4	VDD	s/w	CARD DETECION

CIRCUIT DIAGRAM FOR DETECTION OF MICROSD CARD

ELECTRIC FUNCTION	DETECT SWITCH	CIRCUIT MICROSD T6PIN SWITCH PIN
WITHOUT CARD	OPEN	
CARD INSERTED	CLOSED	

CIRCUIT DIAGRAM FOR DETECTION OF NANO SIM CARD

ELECTRIC FUNCTION	DETECT SWITCH	CIRCUIT NANO C5PIN SWITCH PIN
WITHOUT CARD	OPEN	
CARD INSERTED	CLOSED	

TECHNICAL CHARACTERISTICS
1.General Characteristics
Dimensions:17.50LX11.90WX2.30H mm
Weight: Approx 0.5g
Durability:3,000 cycles min.
2.Electrical Characteristics
Contact resisitance:50mΩ typical, 100mΩMax
Insulation resistance:>1000m/500V DC
3.Solderability
Vaporphase:215°C, 30sec.Max
IR reflow:260°C,5~10sec.Max
Manual soldering:370°C.3sec.Max
4.Environmental Characteristics
Operating remperature:-25°C~+85°C
Storage Temperature :-40℃~+85℃
Operating humidity:10%~+95%RH

ITEM	PART NAME	Q'TY	MATERIAL	FINISH
1	HOUSING	1	Hi-temp Thermoplastic	Black UL94V-0
2	DATA CONTACT	14	Copper Alloy	Contact area:Gold plated
3	SWITCH	2	Copper Alloy	Contact area:Gold plated
4	SHELL	2	Stainless Steel	Solder area:Gold plated
5	PULLER	1	Stainless Steel	

Unless otherwise specified, other tolerance are:

X	±0.35	X°	±5°
X.X	±0.25	X.X°	±4°
X.XX	±0.15	X.XX°	±3°
X.XXX	±0.10	X.XXX°	±2°

PROJ. | UNIT mm | SCALE 1:1

CUSTOMER DRAWING

Pb RoHS PROCESS COMPLIANT

MUP INDUSTRIAL CO.,LTD.

NAME: **MICRO SD+NANO SIM Card Connector**

MODEL NO: **MUP-M6102-01**

TYPE : **MICRO SD+NANO SIM WITH S/W 2.30H PULLER TYPE**

DRAWN	Henry Jun.08.2020	DWG NO.: DWG-M6102-01-01
CHECKED	Henry Jun.08.2020	SHEET 1/1
APPROVAL	Simon Jun.08.2020	REVISION 2