FAIRCHILD
SEMICONDUCTOR®

KSP8098/8099

Amplifier Transistor

- Collector-Emitter Voltage: V_{CEO}= KSP8098: 60V
  KSP8099: 80V
- Collector Power Dissipation: P_C (max)=625mW
- Suffix "-C" means Center Collector (1. Emitter 2. Collector 3. Base)

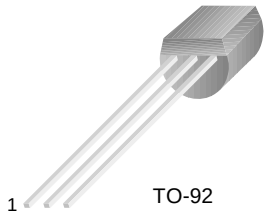

TO-92

1. Emitter 2. Base 3. Collector

NPN Epitaxial Silicon Transistor

Absolute Maximum Ratings T_a=25°C unless otherwise noted

Symbol	Parameter	Value	Units
V_{CBO}	Collector-Base Voltage		
	: KSP8098	60	V
	: KSP8099	80	V
V_{CEO}	Collector-Emitter Voltage		
	: KSP8098	60	V
	: KSP8099	80	V
V_{EBO}	Emitter-Base Voltage	6	V
I_C	Collector Current	500	mA
P_C	Collector Power Dissipation	625	mW
T_J	Junction Temperature	150	°C
T_{STG}	Storage Temperature	-55 ~ 150	°C

Electrical Characteristics T_a=25°C unless otherwise noted

Symbol	Parameter	Test Condition	Min.	Max.	Units
BV_{CBO}	Collector-Base Breakdown Voltage	I_C=100μA, I_E=0			
	: KSP8098		60		V
	: KSP8099		80		V
BV_{CEO}	* Collector-Emitter Breakdown Voltage	I_C=10mA, I_B=0			
	: KSP8098		60		V
	: KSP8099		80		V
BV_{EBO}	Emitter-Base Breakdown Voltage	I_E=10μA, I_C=0	6		V
I_{CBO}	Collector Cut-off Current				
	: KSP8098	V_{CB}=60V, I_E=0		100	nA
	: KSP8099	V_{CB}=80V, I_E=0		100	nA
I_{CEO}	Collector Cut-off Current	V_{CE}=60V, I_B=0		100	nA
I_{EBO}	Emitter Cut-off Current	V_{EB}=6V, I_C=0		100	nA
h_{FE}	DC Current Gain	V_{CE}=5V, I_C=1mA	100	300	
		V_{CE}=5V, I_C=10mA	100		
		V_{CE}=5V, I_C=100mA	75		
V_{CE} (sat)	Collector-Emitter Saturation Voltage	I_C=100mA, I_B=5mA		0.4	V
		I_C=100mA, I_B=10mA		0.3	V
V_{BE} (on)	* Base-Emitter On Voltage				
	: KSP8098	V_{CE}=5V, I_C=1mA	0.5	0.7	V
	: KSP8099	V_{CE}=5V, I_C=10mA	0.6	0.8	V
f_T	Current Gain Bandwidth Product	V_{CE}=5V, I_C=10mA f=100MHz	150		MHz
C_{ob}	Output Capacitance	V_{CB}=5V, I_E=0 f=1MHz		6	pF

* Pulse Test: Pulse Width≤300μs, Duty Cycle≤2%

©2001 Fairchild Semiconductor Corporation

Typical Characteristics

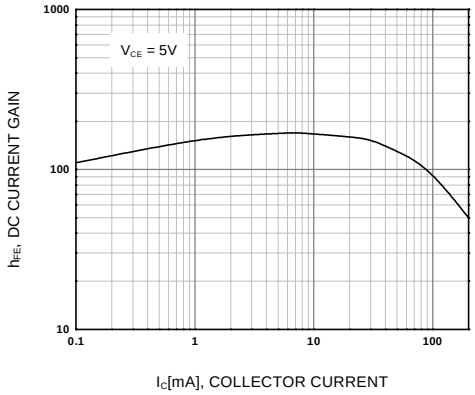

Figure 1. DC current Gain

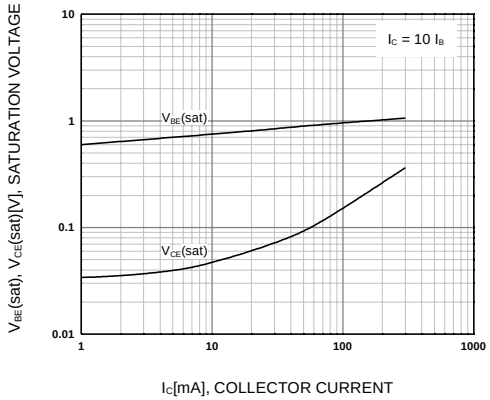

Figure 2. Collector-Emitter Saturation Voltage Base-Emitter Saturation Voltage

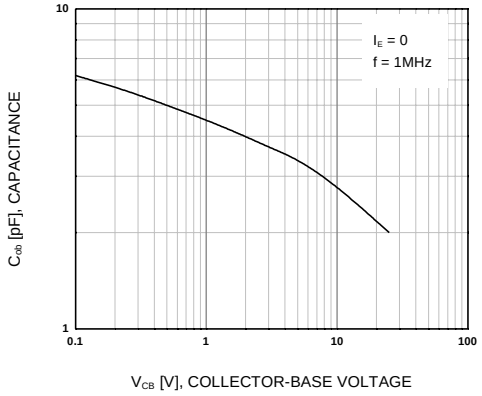

Figure 3. Output Capacitance

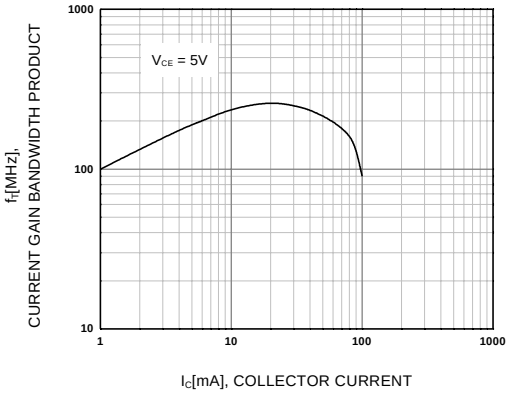

Figure 4. Current Gain Bandwidth Product

©2001 Fairchild Semiconductor Corporation

Package Demensions

TO-92

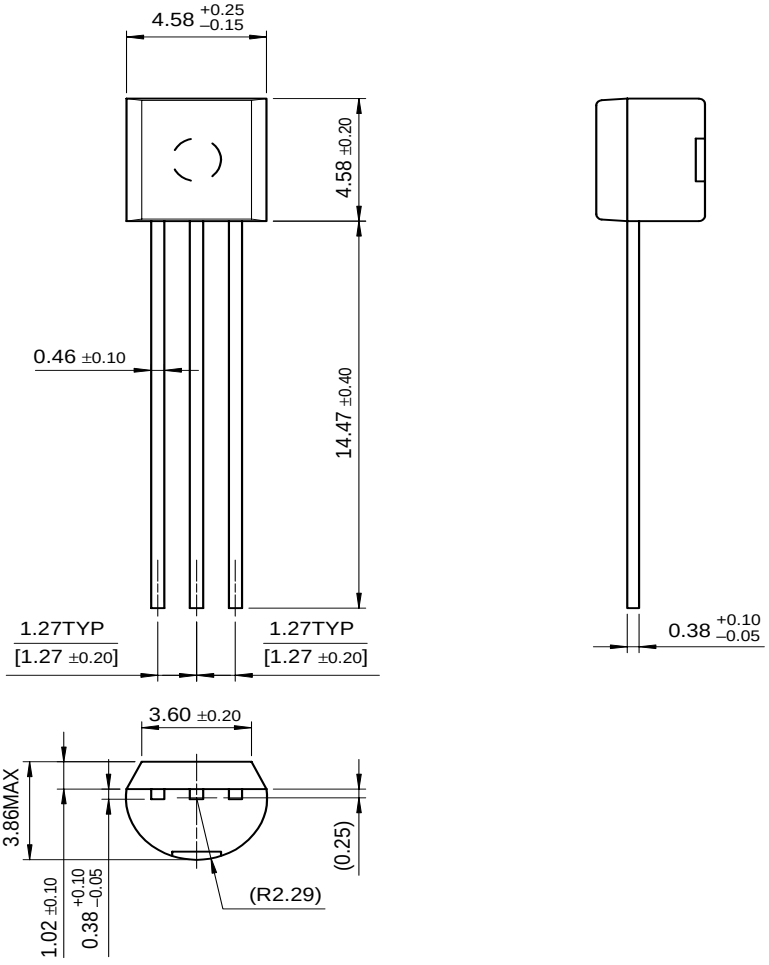

Dimensions in Millimeters

©2001 Fairchild Semiconductor Corporation

TRADEMARKS

The following are registered and unregistered trademarks Fairchild Semiconductor owns or is authorized to use and is not intended to be an exhaustive list of all such trademarks.

ACEx™
Bottomless™
CoolFET™
CROSSVOLT™
DenseTrench™
DOME™
EcoSPARK™
E^2CMOS™
EnSigna™
FACT™
FACT Quiet Series™
FAST®
FASTr™
FRFET™
GlobalOptoisolator™
GTO™
HiSeC™
ISOPLANAR™
LittleFET™
MicroFET™
MICROWIRE™
OPTOLOGIC™
OPTOPLANAR™
PACMAN™
POP™
Power247™
PowerTrench®
QFET™
QS™
QT Optoelectronics™
Quiet Series™
SLIENT SWITCHER®
SMART START™
STAR*POWER™
Stealth™
SuperSOT™-3
SuperSOT™-6
SuperSOT™-8
SyncFET™
TruTranslation™
TinyLogic™
UHC™
UltraFET®
VCX™

STAR*POWER is used under license

DISCLAIMER

FAIRCHILD SEMICONDUCTOR RESERVES THE RIGHT TO MAKE CHANGES WITHOUT FURTHER NOTICE TO ANY PRODUCTS HEREIN TO IMPROVE RELIABILITY, FUNCTION OR DESIGN. FAIRCHILD DOES NOT ASSUME ANY LIABILITY ARISING OUT OF THE APPLICATION OR USE OF ANY PRODUCT OR CIRCUIT DESCRIBED HEREIN; NEITHER DOES IT CONVEY ANY LICENSE UNDER ITS PATENT RIGHTS, NOR THE RIGHTS OF OTHERS.

LIFE SUPPORT POLICY

FAIRCHILD'S PRODUCTS ARE NOT AUTHORIZED FOR USE AS CRITICAL COMPONENTS IN LIFE SUPPORT DEVICES OR SYSTEMS WITHOUT THE EXPRESS WRITTEN APPROVAL OF FAIRCHILD SEMICONDUCTOR CORPORATION.

As used herein:

1. Life support devices or systems are devices or systems which, (a) are intended for surgical implant into the body, or (b) support or sustain life, or (c) whose failure to perform when properly used in accordance with instructions for use provided in the labeling, can be reasonably expected to result in significant injury to the user.

2. A critical component is any component of a life support device or system whose failure to perform can be reasonably expected to cause the failure of the life support device or system, or to affect its safety or effectiveness.

PRODUCT STATUS DEFINITIONS

Definition of Terms

Datasheet Identification	Product Status	Definition
Advance Information	Formative or In Design	This datasheet contains the design specifications for product development. Specifications may change in any manner without notice.
Preliminary	First Production	This datasheet contains preliminary data, and supplementary data will be published at a later date. Fairchild Semiconductor reserves the right to make changes at any time without notice in order to improve design.
No Identification Needed	Full Production	This datasheet contains final specifications. Fairchild Semiconductor reserves the right to make changes at any time without notice in order to improve design.
Obsolete	Not In Production	This datasheet contains specifications on a product that has been discontinued by Fairchild semiconductor. The datasheet is printed for reference information only.

©2001 Fairchild Semiconductor Corporation

KSP8098
NPN Epitaxial Silicon Transistor

Contents
Features | Applications | Product status/pricing/packaging

Datasheet
Download this datasheet

PDF

e-mail this datasheet

[E-

This page
Print version

Related Links

Request samples
How to order products
Product Change Notices (PCNs)
Support
Distributor and field sales representatives
Quality and reliability
Design tools

Features

- Collector-Emitter Voltage : V_{CEO}= KSP8098: 60V
- Collector-Emitter Voltage : V_{CEO}=KSP8099: 80V
- Collector Dissipation: P_C (max) = 625mW
- Suffix “-C” means Center Collector (1. Emitter 2. Collector 3. Base)

back to top

Applications

Amplifier Transistor

back to top

Product status/pricing/packaging

Product	Product status	Pricing*	Package type	Leads	Packing method
KSP8098CTA	Full Production	$0.045	TO-92	3	TAPE REEL
KSP8098TA	Full Production	$0.045	TO-92	3	TAPE REEL
KSP8098TF	Full Production	$0.045	TO-92	3	TAPE REEL
KSP8098CBU	Full Production	$0.045	TO-92	3	BULK

* 1,000 piece Budgetary Pricing

back to top

© Copyright 2002 Fairchild Semiconductor

KSP8099
NPN Epitaxial Silicon Transistor

Contents
Features | Applications | Product status/pricing/packaging

Datasheet
Download this datasheet
PDF

e-mail this datasheet
[E-

This page
Print version

Related Links

Request samples
Dotted line
How to order products
Dotted line
Product Change Notices (PCNs)
Dotted line
Support
Dotted line
Distributor and field sales representatives
Dotted line
Quality and reliability
Dotted line
Design tools

Features

- Collector-Emitter Voltage : V_{CEO}= KSP8098: 60V
- Collector-Emitter Voltage : V_{CEO}=KSP8099: 80V
- Collector Dissipation: P_C (max) = 625mW
- Suffix “-C” means Center Collector (1. Emitter 2. Collector 3. Base)

back to top

Applications

Amplifier Transistor

back to top

Product status/pricing/packaging

Product	Product status	Pricing*	Package type	Leads	Packing method
KSP8099TA	Full Production	$0.045	TO-92	3	TAPE REEL
KSP8099TF	Full Production	$0.045	TO-92	3	TAPE REEL
KSP8099BU	Full Production	$0.045	TO-92	3	BULK

* 1,000 piece Budgetary Pricing

back to top

© Copyright 2002 Fairchild Semiconductor