注: 未经允许禁止传输、复制、编辑该文档，以及利用其内容进行交流

REV	E.C.N NO.	CONTENT	CHK	DATE

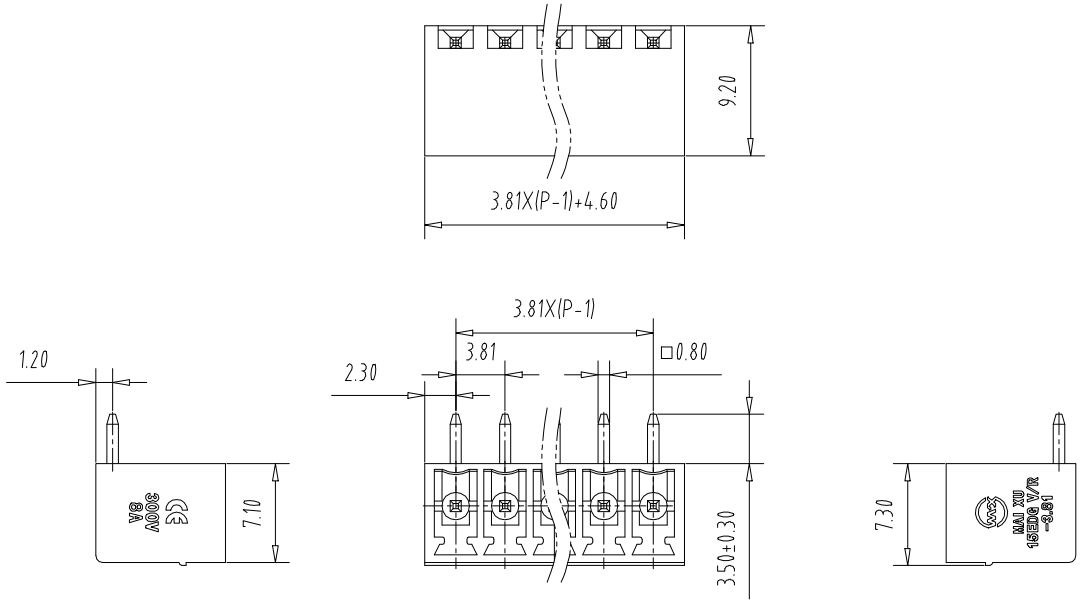

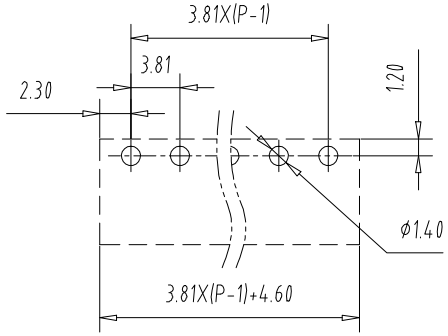

PCB Layout

NOTES1:

UL Standard

1.Rating voltage/current: 300V/8A

2.withstanding voltage: AC2000V/1Min

IEC Standard

1.

Pollution Degree	3	2	2
Overvoltage Category	Ⅲ	Ⅲ	Ⅱ
Rate Impulse Voltage(KV)	2.5KV	2.5KV	2.5KV
Rate Voltage(V)	160V	160V	250V
Rate Current(A)	7A	7A	7A

NOTES2:

1.Housing: PA66 (UL94V-0)

2.Solder Pin: Brass (Sn Plated)

NOTES3:

1.Pitch: 3.81mm Poles: 02-24P

2.Operating temperature: -40℃～+105℃

3.RoHS Compliance

How to order

MX15EDGR - 3.81 - XXP - XXXX - XX - X

产品型号

间距

极数

颜色:

灰色:GY 橙色:OE

蓝色:BU 红色:RD

黑色:BK 透明色:TT

绿色:GN 黄色:YW

透明色:TT 白色:WE

01:常规颜色

02-99:

定制颜色

Cu:铜

Fe:铁

A-Z其他定制

Pitch Range In mm			Nominal Dimension Range In mm					— ⌒ ▱
TO 6	Over 6 TO 10	Over 10 TO 24	TO 30	Over 30 TO 60	Over 60 TO 100	Over 100 TO 150	Over 150	0.1/10 ∠
±0.15	±0.20	±0.30	±0.30	±0.50	±0.70	±1.00	±1.30	±2°

ITEM	NAME OF PART		NO. OF PART	Q"TY	MATERIAL		NOTE
DWG.	CKK	DATE	22.09.14	UNITS	MM	SHEET/OF	1/1
CHK.		DATE		SCALE	1:1	A4	
APP.		DATE		NAME	MX15EDGR-3.81-XXP		
CIXI MAIXU ELECTRONICS CO.,LTD. MAI XU 慈溪市迈旭电子有限公司				DWGNO.			