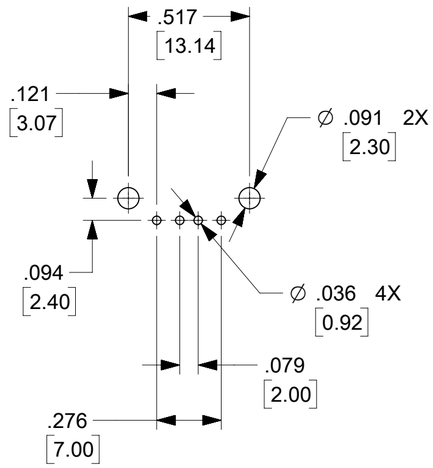

PCB LAYOUT

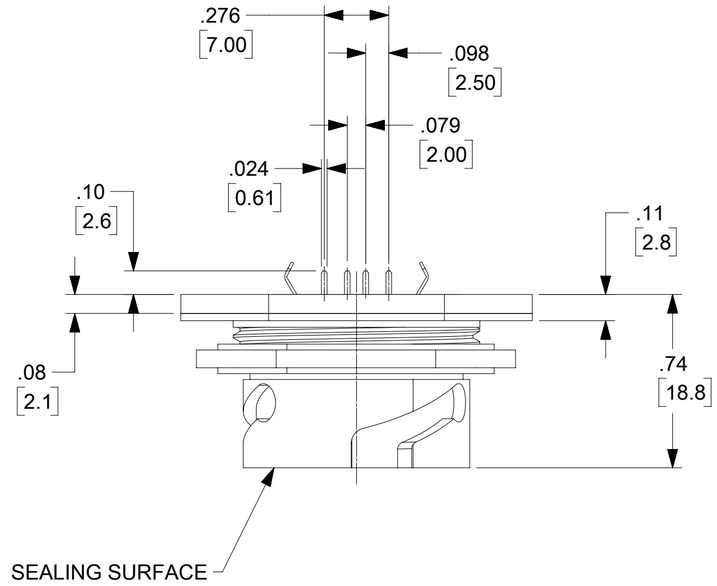

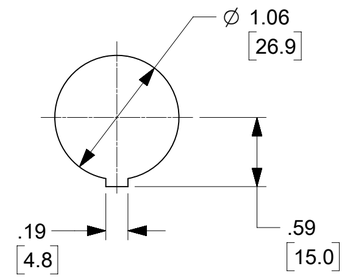

REF. PANEL CUTOUT
SCALE: 1X

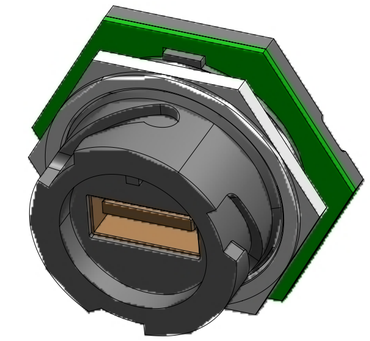

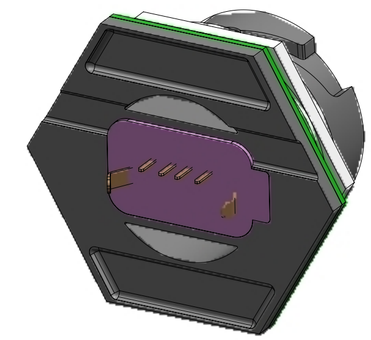

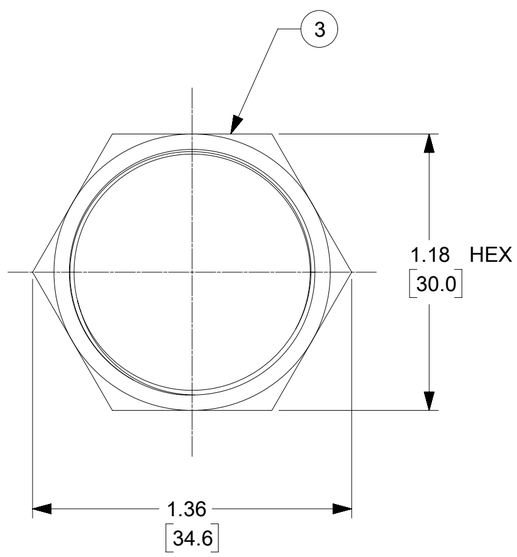

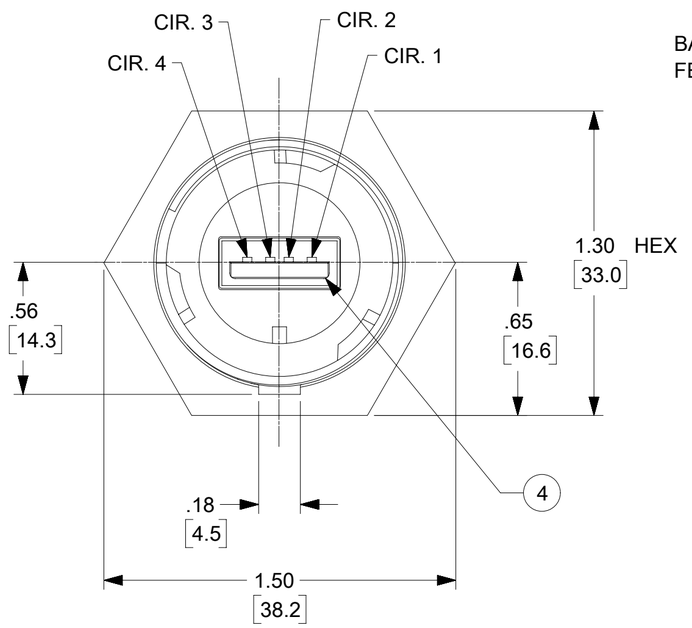

FACE VIEW SHOWN
WITHOUT LOCKNUT
OR GASKET SEAL

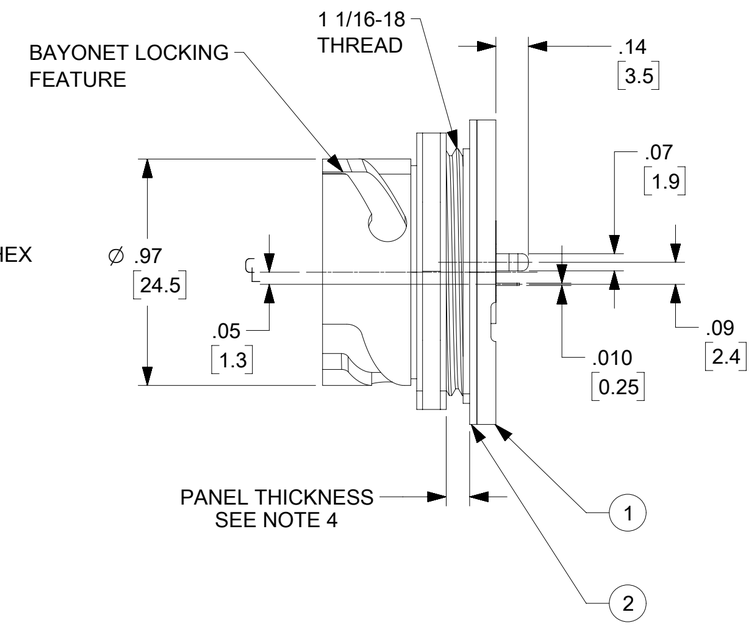

1. MATERIALS: SEE TABLE
2. FINISHES: SEE TABLE
3. ELECTRICAL SPECS:
   VOLTAGE: 30V
   CURRENT: 1.0A
4. MAX PANEL THICKESS: .10
5. PANEL NUT TORQUE: 24 ±4 IN. LBS
6. DIMS SHOWN ARE FOR REFERENCE
   UNLESS NOTED OTHERWISE
7. PRODUCT SPEC: PS-84727-002

TABLE

ITEM	DESCRIPTION	MATERIAL	FINISH
4	USB-A RECEPTACLE	SHELL & CONT: Cu ALLOY	GOLD PLTD CONTACTS
3	LOCKNUT	NYLON	BLACK
2	GASKET SEAL	NEOPRENE	BLACK
1	USB RECEPTACLE, PANEL MOUNT	PBT	BLACK

THIS DRAWING CONTAINS INFORMATION THAT IS PROPRIETARY TO MOLEX ELECTRONIC TECHNOLOGIES, LLC AND SHOULD NOT BE USED WITHOUT WRITTEN PERMISSION

QUALITY SYMBOLS: = 0

EC NO: 114072 2017/06/07
DRWN: RSTONE 2017/07/19
CHK'D: BRUPERT
APPR: BWOODMAN 2017/09/06
MIGRATE TO NX
REV B1

GENERAL TOLERANCES (UNLESS SPECIFIED)

	MM	INCH
4 PLACES	±	±
3 PLACES	±	±
2 PLACES	±	±
1 PLACES	±	±
0 PLACES	±	±

ANGULAR TOL ±

DRAFT WHERE APPLICABLE MUST REMAIN WITHIN DIMENSIONS

DIMENSION UNITS: INCH
SCALE: 2:1
DRWN BY: R. STONE DATE: 2005/11/21
CHK'D BY: R. DEROSS DATE: 2006/01/05
APPR BY: R. DEROSS DATE: 2006/01/05
DRAWING SIZE: C
THIRD ANGLE PROJECTION

molex®

RECEPTACLE, PANEL MT.
USB-A, PCB STYLE, BAYONET LOCK

PRODUCT CUSTOMER DRAWING

SERIES	MATERIAL NUMBER	CUSTOMER
84729	847290009	GEN MARKET

DOCUMENT NUMBER	DOC TYPE	DOC PART	SHEET NUMBER
SD-84729-004	PSD	000	1 OF 1

RELEASE STATUS | RELEASE DATE

FORMAT: Eng-tega-master-tb-prod-C
REVISION: C
DATE: 2017/02/06