MODEL NO.	PACKAGING
145-0801-811	ONE PCS PER BAG

REV	ECO	DATE
001	ECO-19-0019	05/31/2019

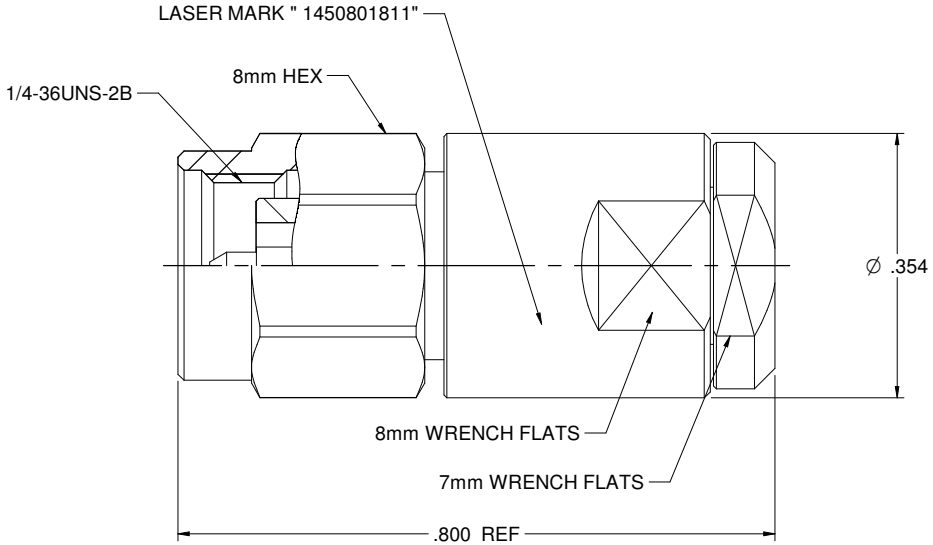

NOTES: UNLESS OTHERWISE SPECIFIED

1. MATERIAL & FINISH:
   1.1 BODY & NUT: PASSIVATED STAINLESS STEEL
   1.2 INNER BODY: GOLD PLATED BRASS
   1.3 CONTACT PIN, C RING: GOLD PLATED BERYLLIUM COPPER
   1.4 INSULATOR: PEEK, NATURAL
   1.5 GASKET: SILICONE RED
   1.6 RESITOR: 50 OHMS +/- 1% 1/4W

2. ELECTRICAL:
   2.1 IMPEDANCE: 50 OHMS
   2.2 FREQUENCY RANGE: DC-40 GHz
   2.3 VOLTAGE STANDING WAVE RATIO: 1.2 MAX
   2.4 DIELECTRIC WITHSTANDING VOLTAGE: 750 VRMS MIN
   2.5 CONTACT RESISTANCE:
      2.5.1 CENTER CONTACT: 3 MILLIOHM MAX
      2.5.2 OUTER CONTACT: 2 MILLIOHM MAX
   2.6 INSULATOR RESISTANCE: 5000 MEGOHM MIN
   2.7 WORKING VOLTAGE: 250 VRMS MAX

3. MECHANICAL:
   3.1 ENGAGEMENT AND DISENGAGEMENT FORCE: 0.23 NM MAX
   3.2 COUPLING TORQUE RECOMMENDED: 0.8 NM TO 1.1 NM
   3.3 COUPLING PROOF TORQUE: 1.7 NM
   3.4 COUPLING NUT RETENTION: 267 NM
   3.5 CONTACT RETENTION: 22 NM
   3.6 DURABILITY: 500 CYCLES MIN

4. ENVIRONMENT:
   4.1 OPERATING TEMPERATURE: -55 TO 125℃
   4.2 THERMAL SHOCK: MIL-STD-202, METHOD 107, CONDITION B
   4.3 SHOCK: MIL-STD-202, METHOD 213, CONDITION I
   4.4 VIBRATION: MIL-STD-202, METHOD 204, CONDITION D
   4.5 MOISTURE RESISTANCE: MIL-STD-202, METHOD 106
   4.6 SALT SPRAY: MIL-STD-202 METHOD 101, CONDITION B

cinch	Model No. 145-0801-811/820		Johnson
	RoHS2 ☑ 2011/65/EU	Cage Code	Title: 2.92mm (SMK) TERMINATOR W/O CHAIN PLUG(50 OHMS+/-1 %,1/4W)
	UNLESS OTHERWISE SPECIFIED UNITS: INCH	3RD ANGLE PROJECTION	Drawing No. 145-0801-811/820 — Rev. 001
	.XXX ±.02 .XXXX ±.01 ANGLES ±5°	Drawn by: Betty.Yu	
		Date: 05/31/2019	Size C — DO NOT SCALE DRAWING — Workmanship Std NONE — Sheet 1 of 1