Technical Data Sheet		Rosenberger
SMA	Adaptor 4.3-10 plug – SMA Jack	**32K164-S00N1**

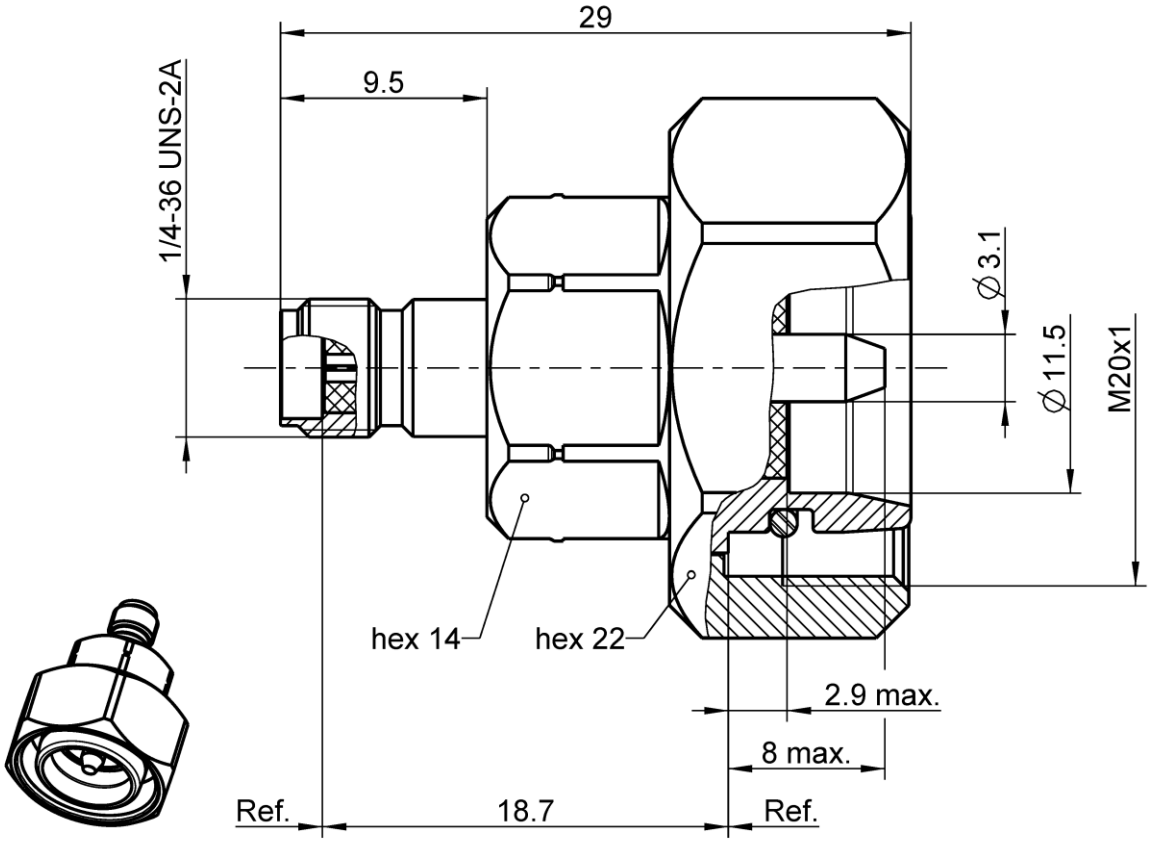

All dimensions are in mm; tolerances according to ISO 2768 m-H

Interface

According to	4.3-10 side:	IEC 61169-54
	SMA side:	IEC 60169-15, EN 122110, MIL-STD-348A, Fig. 310

Documents

N/A

Material and plating

Connector parts		**Material**	**Plating**
Center contact	4.3-10 side:	Brass	Silver, 3-6 µm
Center contact	SMA side:	CuBe	AuroDur®, gold plated
Body		Brass	Flash white bronze over silver(e.g. Optargen®)
Dielectric		PTFE	
Gasket		Silicone	

Dieses Dokument ist urheberrechtlich geschützt ● This document is protected by copyright ● Rosenberger Hochfrequenztechnik GmbH & Co. KG

Rosenberger Hochfrequenztechnik GmbH & Co. KG
P.O.Box 1260 D-84526 Tittmoning Germany
www.rosenberger.de

Tel. : +49 8684 18-0
Email : info@rosenberger.de

Electrical data

Impedance	50 Ω	
Frequency	DC to 12 GHz	
Return loss	≥ 36 dB @ DC to 4 GHz	
	≥ 32 dB @ 4 GHz to 6 GHz	
Insertion loss	$\leq 0.05 \times \sqrt{f\,[GHz]}$ dB	
Insulation resistance	≥ 5 GΩ	
Center contact resistance	≤ 1.0 mΩ, 4.3-10 side	≤ 3 mΩ, SMA side
Outer contact resistance	≤ 1.0 mΩ, 4.3-10 side	≤ 2 mΩ, SMA side
Test voltage	1000 V rms	
Working voltage	480 V rms	
RF-leakage	≥ 100 dB @ DC to 1 GHz	
Power handling (at 20 °C, sea level, VSWR 1.0)	≤ 200 W @ 2 GHz	
Intermodulation (3rd order) valid for 4.3-10 only	≥ 160 dBc (2 x 46 dBm) @ 0.4 – 4.0 GHz	
	≥ 166 dBc (2 x 43 dBm) @ 0.4 – 4.0 GHz	

Mechanical data

	4.3-10 side	SMA side
Mating cycles	≥ 100	min. 500
Center contact captivation: axial	≥ 30 N	≥ 20 N
radial	> 5 Ncm	≥ 1 Ncm
Center contact retention force	1.5 - 20 N	
Recommended torque	5 Nm	0.8 – 1.1 Nm

Environmental data

Temperature range	-55 °C to +90 °C operating temperature
Thermal shock	IEC 60169-1, Sub-clause 16.4
Corrosion resistance	ISO 21207 method B
Vibration	IEC 61169-1 9.3.3 and IEC 60068-2-64
Shock	IEC 61169-1 9.3.14
Degree of protection (mated pair)	IEC 60529, IP68 1h / 25m
RoHS	compliant

Tooling

N/A

Suitable cables

N/A

Weight

Weight 32.7 g/pce

While the information has been carefully compiled to the best of our knowledge, nothing is intended as representation or warranty on our part and no statement herein shall be construed as recommendation to infringe existing patents. In the effort to improve our products, we reserve the right to make changes judged to be necessary.

For the installation of the electrotechnical equipment, particular electrotechnical expertise is required.

Draft	Date	Approved	Date
F. Fraunhofer	30.04.13	Chr. Janßen	09.11.20

Rev.	Engineering change number	Name	Date
b00	20-1927	S. Huber-Siegl	09.11.20

Rosenberger Hochfrequenztechnik GmbH & Co. KG
P.O.Box 1260 D-84526 Tittmoning Germany
www.rosenberger.de

Tel. : +49 8684 18-0
Email : info@rosenberger.de

Dieses Dokument ist urheberrechtlich geschützt ● This document is protected by copyright ● Rosenberger Hochfrequenztechnik GmbH & Co. KG