RoHS compliant
by exemption

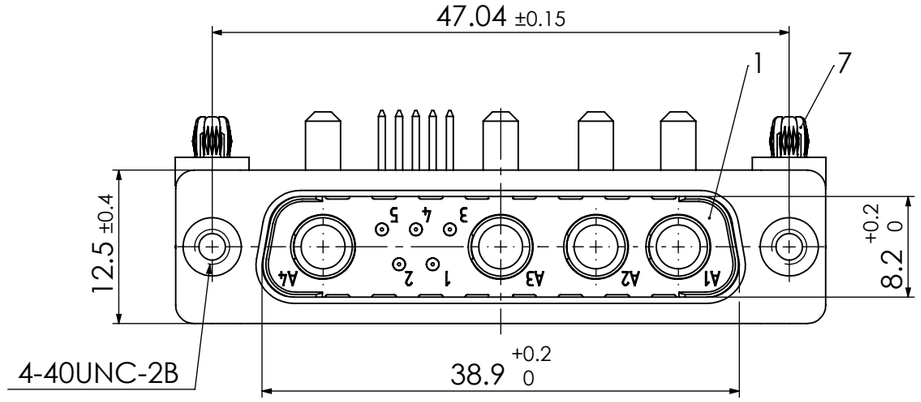

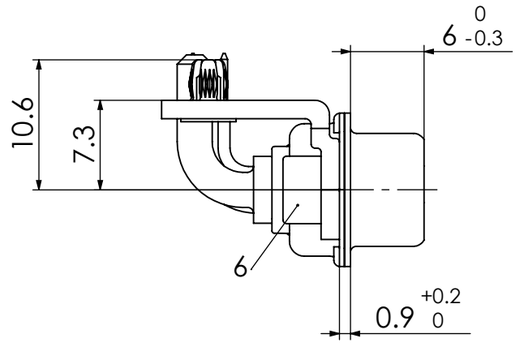

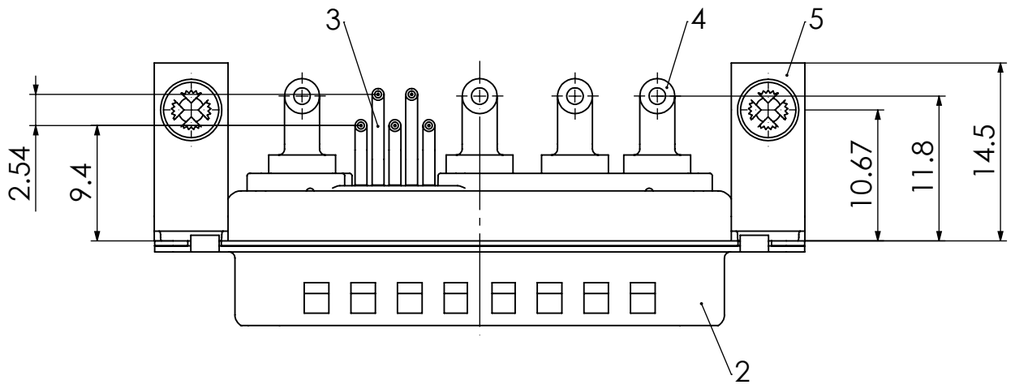

PCB hole pattern, mounting side

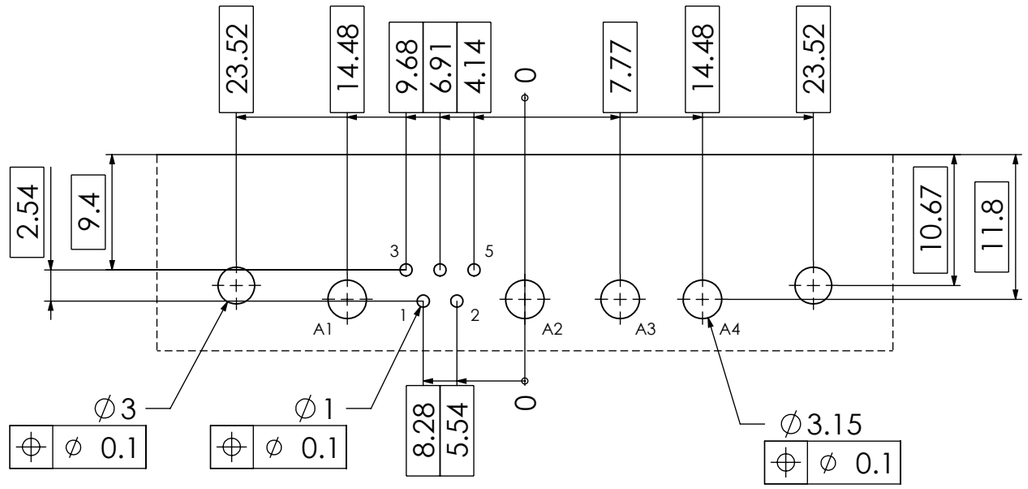

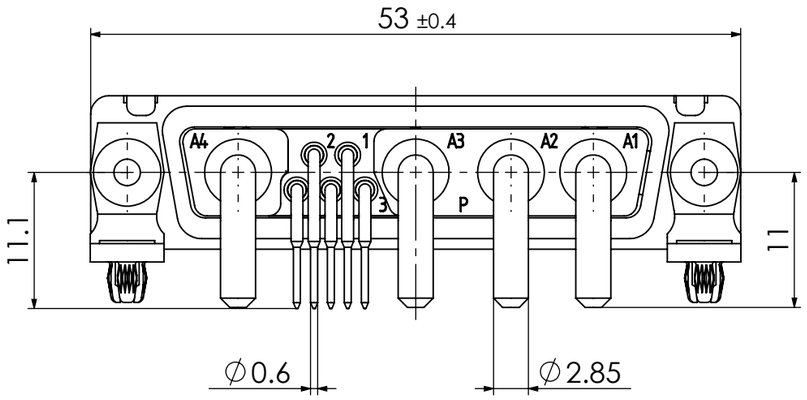

No.	St.	Part	Type Description/Material	Surface plating/Colour/Class
7	2	Snap-in rivet	PCB 1.6mm / Brass	tin plated
6	2	Clinch nut	MW 4-40 / Steel	tin plated
5	2	Bracket	F1080-13B / Steel	tin plated
4	4	High power contact	FMP008P104R	20A
3	5	Signal contact	P5 / Brass	0.8µm Au
2	1	Shell	Steel	tin plated
1	1	Insulator	PBT (-55°C to +130°C) acc. UL94V-0	green

FUNCTIONAL SYMBOLS
E = 0
E = 0
E = 0

THIS DRAWING CONTAINS INFORMATION THAT IS PROPRIETARY TO MOLEX ELECTRONIC TECHNOLOGIES, LLC AND SHOULD NOT BE USED WITHOUT WRITTEN PERMISSION

DIMENSION UNITS: mm
SCALE: 2:1
MEASUREMENTS WITHOUT TOLERANCE ACC. TO: ISO 2768-m

REV.	CH.-NO.
3	24193
2	24130
1	

CURRENT REVISION
DRWN: DRAWN BY msteinbrueck 15-03-2023
APPR: APPR BY mteubel 16-03-2023

INITIAL REVISION
DRWN: DRAWN BY mpostulka 01-08-2008
APPR: APPR BY MJobst 04-08-2008

REPLACEMENT FOR:
FRIST ANGLE PROJECTION
DRAWING: A3-SIZE

molex

FCT D-Sub Mixed-Layout Connector

PRODUCT CUSTOMER DRAWING

MATERIAL NUMBER: 1731071938
REVISION: 3
DOCUMENT NUMBER: FM9W4P5-1343
CUSTOMER: GENERAL MARKET
SHEET NUMBER: 1 OF 1

COMMENT:
ALL RIGHTS ARE RESERVED BY US FOR THIS DRAWING, WITHOUT OUR PRIOR CONSENT,
IT MAY NEITHER BE DUBLICATED NOR MADE AVAILABLE TO A THIRD PARTY,
AND IT ALSO MAY NOT BE IMPROPERLY USED BY TE RECEIVER, OR A THIRD PARTY.