RoHS compliant
by exemption

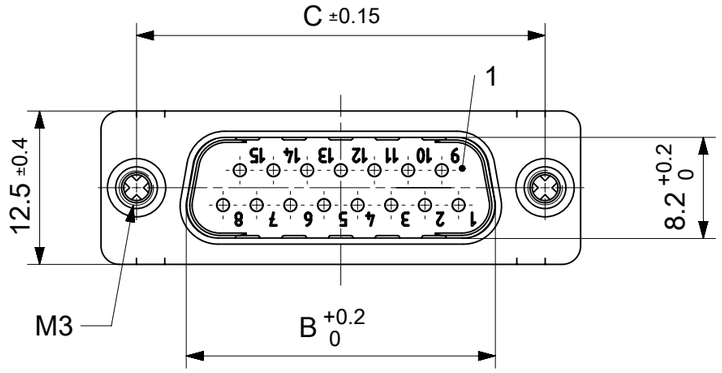

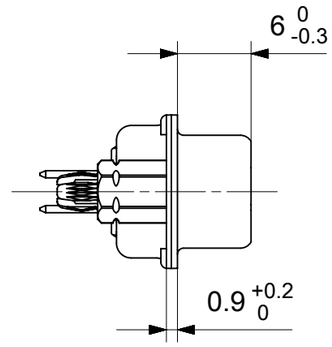

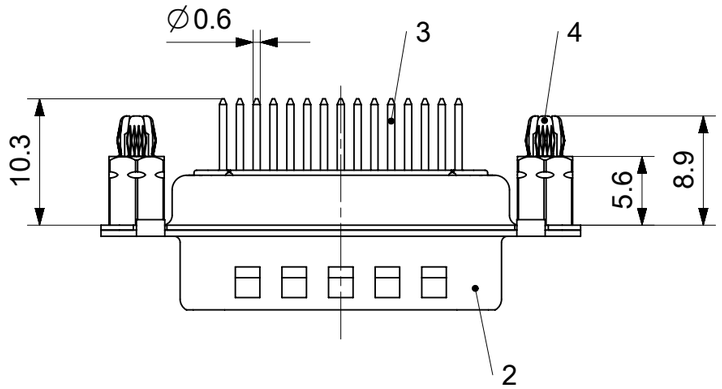

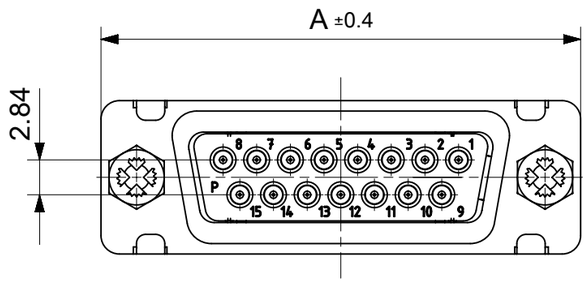

FCT Part number:
Fxx*1)P1y*2)-0983
e.g. F15P1G1-0983
*1) xx No. of contacts 09, 15, 25 or 37
*2) y for performance classes 1, 2 or 3
(contact cycle for G1/G2/G3 = 500/200/50)

Material Number	xx*1)	y*2)	A[mm]	B[mm]	C[mm]	*E[mm]	*F[mm]
1731091047	09	G1	30.8	16.9	25	∅1	∅3
-	15	-	39.1	25.2	33.3		
1731091395	25	G1	53	38.9	47.04		
1731092450		G2					
-	37	-	69.3	55.3	63.5		

*PCB hole patterns ∅E, ∅F see document 2195600023

No.	Pc.	Part	Type Description/Material	Surface plating/ Color/Class
4	2	Snap-in bolt	PCB 1.6 / Brass	tin plated
3	xx	Signal contact	P1 / Brass	G1 / G2
2	1	Shell	Steel	tin plated
1	1	Insulator	PBT (-55°C to +125°C) acc. UL94V-0	white

MEASUREMENTS WITHOUT TOLERANCE ACC TO ISO 2768-m

REPLACEMENT FOR DOCUMENT NUMBER: FxxP1Gy-0983

THIS DRAWING CONTAINS INFORMATION THAT IS PROPRIETARY TO MOLEX ELECTRONIC TECHNOLOGIES, LLC AND SHOULD NOT BE USED WITHOUT WRITTEN PERMISSION

FUNCTIONAL SYMBOLS: A = 0, C = 0, B = 0

DIVISIONAL SYMBOLS

DIMENSION UNITS: mm
SCALE: 2:1

GENERAL TOLERANCES (UNLESS SPECIFIED)

ANGULAR TOL	±	°
4 PLACES	±	
3 PLACES	±	
2 PLACES	±	
1 PLACE	±	
0 PLACES	±	

DRAFT WHERE APPLICABLE MUST REMAIN WITHIN DIMENSIONS

CURRENT REV DESC:

EC NO: 706086
DRWN: SKANDB 2021/11/25
CHK'D: MTEUBEL 2022/05/11
APPR: MTEUBEL 2022/05/11

INITIAL REVISION:
DRWN: SKANDB 2021/11/25
APPR: MTEUBEL 2022/05/11

FIRST ANGLE PROJECTION

DRAWING: A3-SIZE
SERIES: 173109

molex

FCT D-SUB MINIATURE CONNECTOR

PRODUCT CUSTOMER DRAWING

DOCUMENT NUMBER	DOC TYPE	DOC PART	REVISION
1731091047	PSD	000	A

MATERIAL NUMBER	CUSTOMER	SHEET NUMBER
SEE TABLE	GENERAL MARKET	1 OF 1

DOCUMENT STATUS	P1	RELEASE DATE	2022/05/11 11:11:32

FORMAT: master-landscape-A3
REVISION: J1
DATE: 2021/05/06

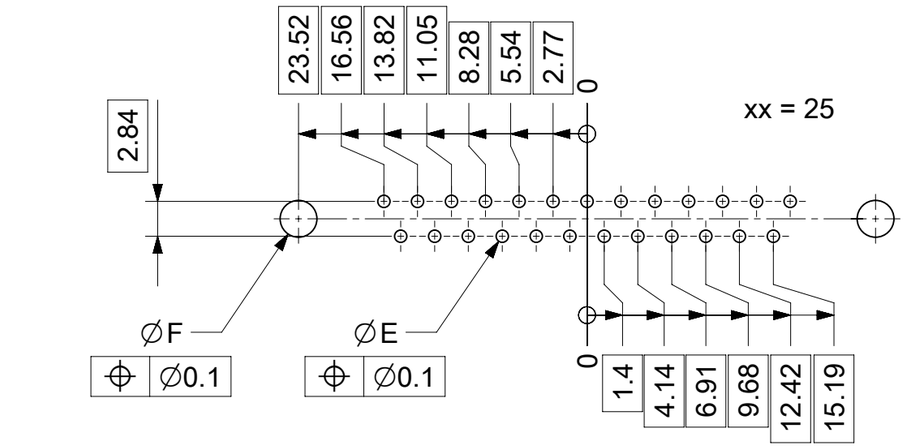

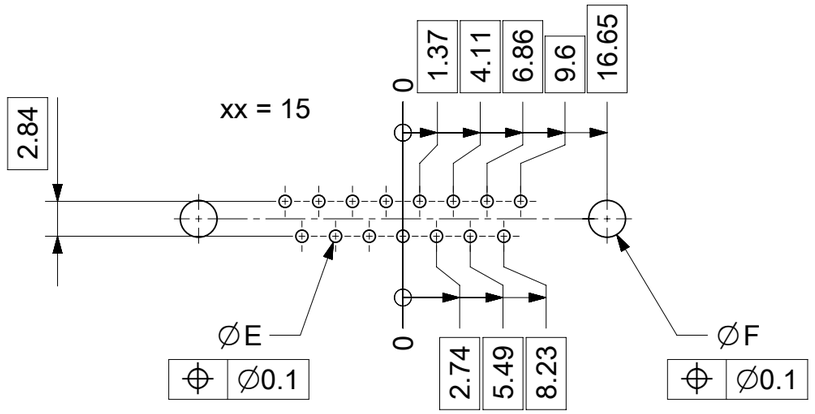

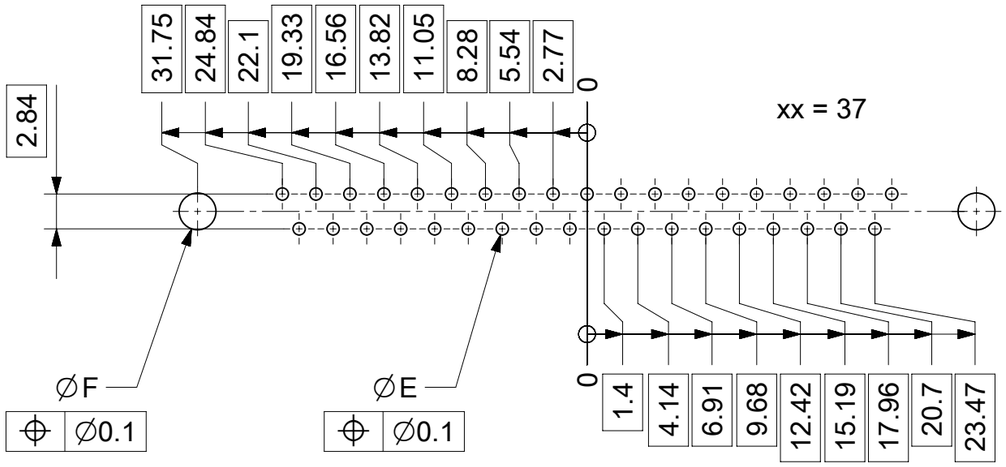

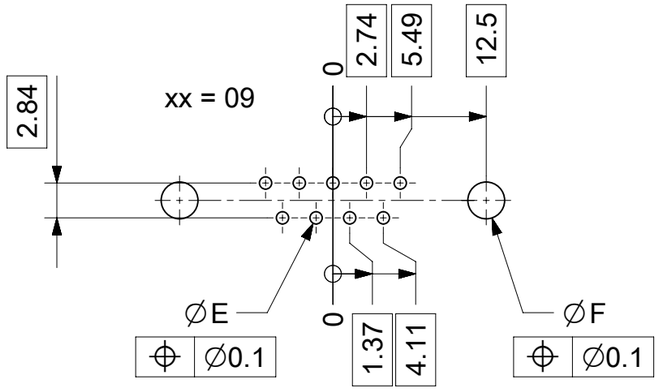

øE, øF see data sheet incl. connector
øF connectors with accessories only

MEASUREMENTS WITHOUT TOLERANCE ACC TO ISO 2768-m			REPLACEMENT FOR DOCUMENT NUMBER: AM0023
FUNCTIONAL SYMBOLS	THIS DRAWING CONTAINS INFORMATION THAT IS PROPRIETARY TO MOLEX ELECTRONIC TECHNOLOGIES, LLC AND SHOULD NOT BE USED WITHOUT WRITTEN PERMISSION		
= 0	DIMENSION UNITS: mm / SCALE: 2:1	CURRENT REV DESC:	molex
= 0	GENERAL TOLERANCES (UNLESS SPECIFIED)		FCT PCB HOLE PATTERN STRAIGHT CONTACT NO. OF CONTACTS 09-37
= 0	ANGULAR TOL ± °	EC NO: 713905	
	4 PLACES ±	DRWN: SKANDB 2022/05/16	
DIVISIONAL SYMBOLS	3 PLACES ±	CHK'D: MTEUBEL 2022/07/12	PRODUCT CUSTOMER DRAWING
	2 PLACES ±	APPR: MTEUBEL 2022/07/12	
	1 PLACE ±	INITIAL REVISION:	DOCUMENT NUMBER: 2195600023 / DOC TYPE: PSD / DOC PART: 000 / REVISION: A
	0 PLACES ±	DRWN: SKANDB 2022/05/16	
	DRAFT WHERE APPLICABLE MUST REMAIN WITHIN DIMENSIONS	APPR: MTEUBEL 2022/07/12	
		FIRST ANGLE PROJECTION / DRAWING: A3-SIZE / SERIES: 219560	MATERIAL NUMBER: 219560 / CUSTOMER: GENERAL MARKET / SHEET NUMBER: 1 OF 1

DOCUMENT STATUS	P1	RELEASE DATE	2022/07/12 08:25:55

FORMAT: master-Sheet-A3
REVISION: J1
DATE: 2021/05/05