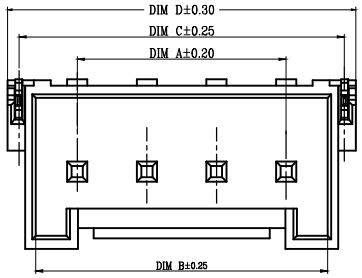

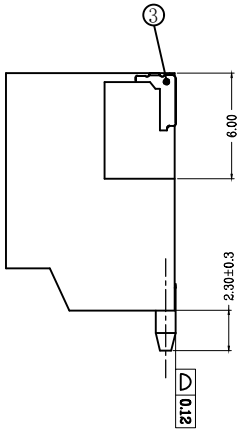

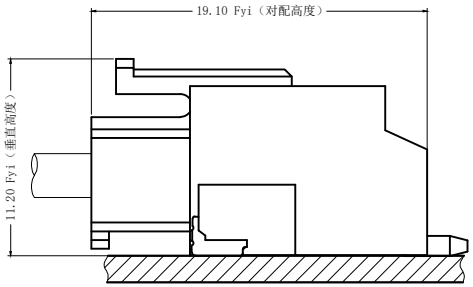

Assembly Layout

SPECIFICATIONS

1、Current Rating: 7 A AC, DC
2、Voltage Rating: 250V AC, DC
3、Temperatuer Range: -25℃~ +85℃
4、Contact Resistance: 30mΩ Max
5、Insulation Resistance: 1000mΩ Min
6、Withstanding Voltang: 1000V AC/minute
7、Material: Wafer LCP UL94V-0
PIN Brass Tin-plated
Solder tad Brass Tin-plate

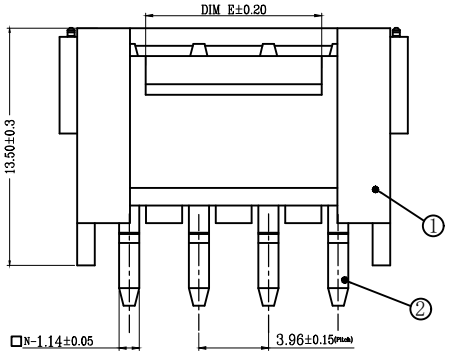

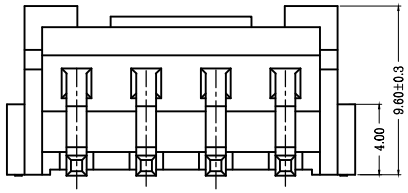

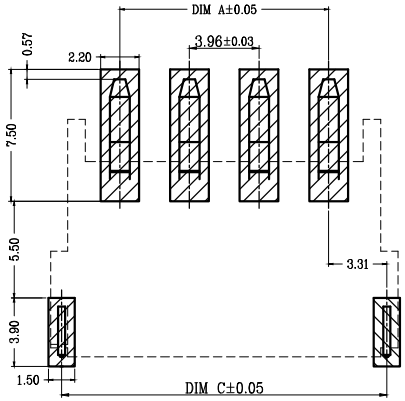

适用线路板(厚度:0.8mm~1.6mm)

Circuit	Part NO.	Dimensions mm				
		A	B	C	D	E
2	HC-VH-2AWT	3.96	8.68	10.61	11.88	3.88
3	HC-VH-3AWT	7.92	12.64	14.57	15.84	7.84
4	HC-VH-4AWT	11.88	16.60	18.53	19.80	
5	HC-VH-5AWT	15.84	20.56	22.49	23.76	
6	HC-VH-6AWT	19.80	24.52	26.45	27.72	
7	HC-VH-7AWT	23.76	28.48	30.41	31.68	
8	HC-VH-8AWT	27.72	32.44	34.37	35.64	
9	HC-VH-9AWT	31.68	36.40	38.33	39.60	
10	HC-VH-10AWT	35.64	40.36	42.29	43.56	10.00
11	HC-VH-11AWT	39.60	44.32	46.25	47.52	
12	HC-VH-12AWT	43.56	48.28	50.21	51.48	
13	HC-VH-13AWT	47.52	52.24	54.17	55.44	
14	HC-VH-14AWT	51.48	56.20	58.13	59.40	
15	HC-VH-15AWT	55.44	60.16	62.09	63.36	
16	HC-VH-16AWT	59.40	64.12	66.05	67.32	

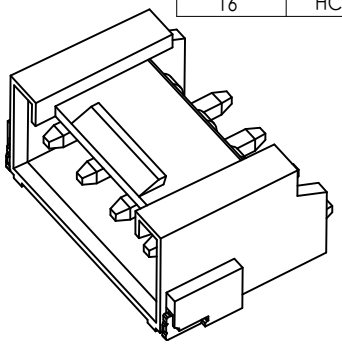

Ordering Information

HC - VH - N*** - **

Pin
Type
Y=孔盖
A=直针
AW=弯针
PLT=立贴
PWT=卧贴
Contact Plating
默认: Tin
G1:1u" Gold
G2:2u" Gold
G3:3u" Gold
G4:4u" Gold
G5:5u" Gold

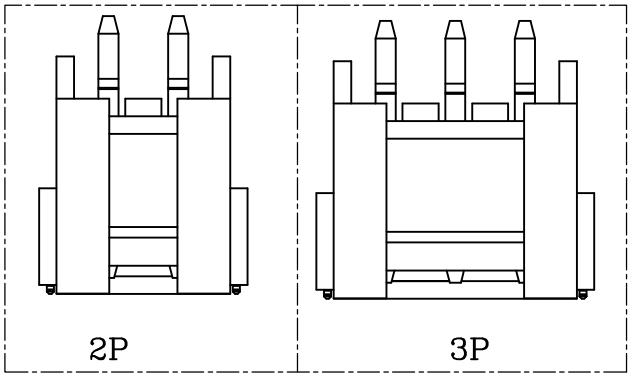

序? No.	?更?容 MODIFY CONTENT	日 期 MODIFY DATE
1	初版?行	

GENERL TOLERANCE

DIM	TOL
X.X	±0.30
X.XX	±0.20
X.XXX	±0.10
Angle	±3.0°

制 ? DRAWING
? 核 CHECK
批 准 APPROVAL
比 例 SCALE
投 影 Projection

深圳市华灿天禄电子有限公司
ShenzhenhuacantianluELECTRONICS CO.,LTD

?品名? TITLE	VH (3.96) 卧贴	版 本 REV.	A
?品料? PART NO.	HC-VH-NAWT	? 位 UNITS	mm
材 料 MATERIAL		? 次 SHEET	1/1