HAOYU

PIN	ø2.0	ø2.5
APPD.	✓	

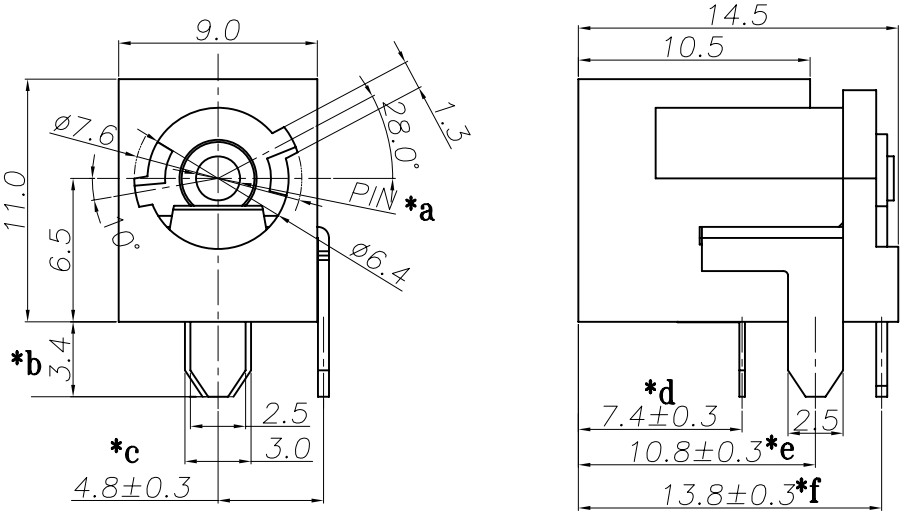

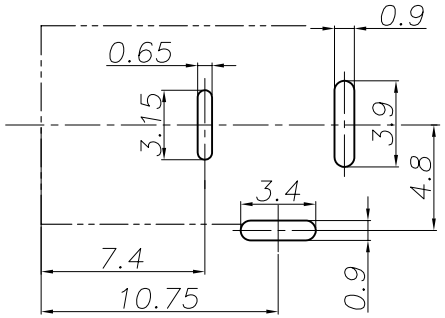

RECOMMENDED P.C.B. LAYOUT
(TOP VIEW)

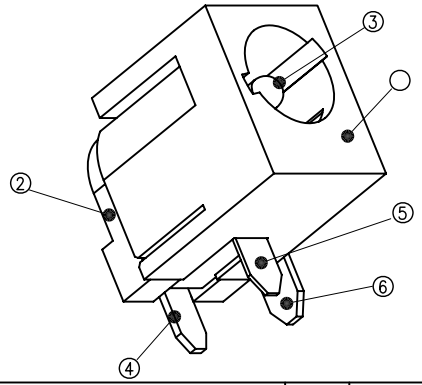

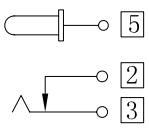

CIRCUIT DIAGRAM

Specification:
1. Rating : DC 30V 5A;
2. Contact resistance: ≤50mΩ;
   After test:≤100mΩ
3. Insulation resistance: ≥100MΩ (500VDC);
   After test:≥50MΩ
4. Withstand voltage: 500VAC ;
5. Insertion and extraction force: 3N～30N;
6. life test: 5000cycles ;
7. Operation temperature range:-20℃～70℃
8. Preservative temperature range:-40℃～85℃

NO.	PART NAME	MATERIAL	QTY	FINISHING
6	DC088SA 2#CURVE PIECE	BRASS	1	Ag-PLATED
5	DC088SA 3#SPRING	PHOSPHOR BRONZE	1	Ag-PLATED
4	DC088SA 5#FLAT PIECE	BRASS	1	Ag-PLATED
3	DC005 SOLID PIN	BRASS	1	Ni-PLATED
2	DC088B COVER	PA10T	1	BLACK
1	DC088S CASE	PA10T	1	BLACK

TOLERANCE UNLESS SPECIFIED
UP TO 5mm: ±0.1
ABOVE 5mm: ±0.2
ANGULAR ±1°

NO	DATE	REVISIONS	BY	APPD

TITLE: DC JACK
MODEL: DC-088SA-PU
UNIT : MM
SCALE: 1:1
ROHS COMPLIANT
DWN
CHK'D
APPD
PRO.AGL:
REV :A0

DONGGUANG HAOYU ELECTRONICS CO., LTD
皓宇 HOOYA 东莞市弘皓电子有限公司