CX SERIES

002388
Issue 5

MICRO SWITCH Weather-Sealed, Explosion-Proof Switches

DESCRIPTION

Honeywell MICRO SWITCH CX switches are built especially for outdoor use in hazardous atmospheres. These enclosures are constructed to withstand the pressure of an internal explosion. Flame paths cool the exploded gases to a point less than the lowest safe operating temperature of the surrounding gas.

MICRO SWITCH 80CX Series switches have rugged bronze housings that are designed to be resistant to salt water and other corrosive environments. They comply with the NEMA 4X requirement for protection against corrosion, in addition to NEMA enclosure standards met by other CX switches.

The product's o-ring seals make the enclosure rain tight, but are outside of required flame paths so explosion proof requirements are maintained. Unless special ordered, all basic switches operate on clockwise and counterclockwise rotation. The actuating mechanism can be field adjusted for CW or CCW operation only. No tools are required.

FEATURES

- Certified for applicable portions of NEMA 7 and 9 for explosive environments
- Select CX switches are certified to ATEX, IEC Ex and INMETRO specifications for global applications
- NEMA 1,3, 4, 4X, 6, 6P and 13 sealing
- Watertight and dust-tight for outdoor use
- Meets hazardous area requirements
- UL Listed, file #E14274 [1]
- CSA Certified, file #LR57324 [1]
- ATEX certificate KEMA 01ATEX2111 X [1]
- IEC Ex certificate IEC Ex TSA 06.003X [1]
- INMETRO certificate TUV 14.0553[1]
- Choice of rugged cast aluminum or bronze housings
- Bronze housing offered for corrosion resistance
- Field-adjustability allows pretravel, overtravel and actuating sequence to be field adjusted without tools

VALUE TO CUSTOMERS

- Building-block design allows for digital switching ouputs
- Weather sealed to NEMA and IP ratings
- UL, CSA, ATEX, IEC Ex, INMETRO certified for hazardous (explosive) environments.[1]
- Designed with the end user in mind, these switches help to create user-friendly interfaces with broad application possibilities to help meet the challenges of many different environments
- Available with gold contacts, low-temp seals and bronze corrosion-resistant housing

INDUSTRIAL APPLICATIONS

- Seaside grain and fuel loading docks that may require explosion proof and corrosion-resistant switches
- Oil and gas wells, refineries and fuel storage facilities that may require explosion-proof and corrosion-resistant switches
- Chemical plants with corrosive environments

PORTFOLIO

The CX Series joins an extensive line of limit switches designed specifically for dangerous indoor or outdoor locations. To learn more about the product, or the many other hazardous area switches in this series, click here.

[1]NOTE: All catalog listings do not carry all certifications. International Certifications are product specific and available upon request. Please contact Honeywell for assistance.

Honeywell

MICRO SWITCH WEATHER-SEALED, EXPLOSION PROOF SWITCHES
CX SERIES

TABLE 1. SPECIFICATIONS	
Characteristic	**Parameter**
Actuators	Side rotary (choice of levers), side rotary (with flat shaft), plunger actuator
Housing material	Aluminum with electrostatic epoxy coating or corrosion-resistant bronze
Termination	3/4 x 14 NPT, M25 x 1,5 mm conduit
Sealing	NEMA 1, 3, 4, 4X, 6, 6P, and 13; IP66
Hazardous area designations	NEMA 7: Class I, Div.1 & Div. 2, Groups B (14CX, 16CX, 24CX, 26CX, 36CX only), C, and D; NEMA 9: Class II, Div.1 & Div. 2, Groups E, F, and G ATEX/IEC Ex, INMETRO (Gas) II 2 G; Exd IIC T6 ATEX/IEC Ex, INMETRO (Dust) II 2 D; Exd tD A21 T85°C
Operating Temperature	-25°C to 85°C [-13°F to 185°F]
Agency Approvals[1]	UL Listed, file #E14274 CSA Certified, file #LR57324 ATEX certificate KEMA 01ATEX2111 X IEC Ex certificate IEC Ex TSA 06.003X INMETRO certiticate TUV 14.0553

[1]NOTE: All catalog listings do not carry all certifications. International Certifications are product specific and available upon request. Please contact Honeywell for assistance.

TABLE 2. ELECTRICAL RATINGS (IN AMPERES)		
Rating Code	**Switch Description**	**UL/CSA**
A	BZ basic switch, SPDT	15 A 120/240/480 Vac; 1/8 HP, 120 Vac 1/4 HP, 240 Vac; 0.5 A, 125 Vdc; 0.25 A, 250 Vdc
B	BA basic switch, SPDT	20 A 120/240/480 Vac; 1 HP, 120 Vac; 2 HP, 240 Vac; 0.5 A, 125 Vdc; 0.25 A, 250 Vdc
C	DT basic switch, DPDT	10 A 120/240/480 Vac, 0.3 A 125 Vdc; 0.15 A, 250 Vdc
D	HS basic switch (hermetic seal), SPDT	1 A, 125 Vac; 5 A, 28 Vdc
F	BZ basic switch (gold contacts), SPDT	1 A, 125 Vac

MICRO SWITCH WEATHER-SEALED, EXPLOSION PROOF SWITCHES
CX SERIES

Figure 1. Product Nomenclature

Switch Type

CX Series Hazardous Area Limit Switch

1	Housing Style & Actuator Type
1	Short housing, side rotary
2	Standard housing, side rotary
3	Short housing, plunger actuator
4	Standard housing, plunger actuator
6	Short housing, black epoxy
7	Stand. housing, bronze material, 5/16-18 UNC-2B mtg holes
8	Standard housing, bronze material
9	Switch assemblies (replacement)

1	Circuitry
1	15 A, SPDT basic switch/es
2	20 A, SPDT basic switch/es
4	10 A, DPDT basic switch/es
6	1 A, SPDT, hermetically sealed basic switch/es
172	1 A, SPDT, gold-plated contacts, basic switch/es

CX	Switch Type
CX	Momentary
CX1	Maintained

2	Switches
1	One switch
2	Two switches
3	Three switches
4	Four switches
5	Two switches, one CW oper., one CCW oper.

	Additional Options
	Non-threaded thru holes
A	Side mounting, 5/16-18(8)
B	Thru mounting, 3/8-24(4)
C	Low temperature
E	ATEX/IEC Ex/ INMETRO certified with cover clamp*
M	Metric, M25 x 1.5 conduit
D01	Flat shaft
00	Or other numbers, various specials

Other special configurations may be available.
For more information, contact your Honeywell representative.

*All catalog listings do not carry all certifications. International Certifications are product specific and available upon request. Please contact Honeywell for assistance.

MICRO SWITCH WEATHER-SEALED, EXPLOSION PROOF SWITCHES
CX SERIES

When factory assembled, all basic switches operate on a clockwise and counter clockwise rotation. The actuating mechanism can be field adjusted for CW or CCW operation only. No tools are required. For listings not shown, contact your Honeywell representative.

TABLE 3. ORDER GUIDE

	Cat. Listing[1]	Housing Material	Cover Size	Switch Action[2]	Basic Switch Type, Quantity, Circuitry	Electrical Rating Page 4)	Operating Torque Nm [In-lb]	Pretravel max.	Differential Travel max.	Overtravel min.	Options	Comments
	11CX12	Epoxy-coated aluminum	Short	Maintained	BZ (2), SPDT each	A (15 A)	0,5 Nm [4.42 in-lb]	15°	10°	90°	–	–
	11CX12E	Epoxy-coated aluminum	Short	Maintained	BZ (2), SPDT each	A (15 A)	0,5 Nm [4.42 in-lb]	15°	10°	90°	ATEX/IEC Ex/INMETRO certified	–
	11CX2	Epoxy-coated aluminum	Short	Momentary	BZ (2), SPDT each	A (15 A)	1,25 Nm [11.1 in-lb]	15°	10°	90°	–	–
	11CX2E	Epoxy-coated aluminum	Short	Momentary	BZ (2), SPDT each	A (15 A)	1,25 Nm [11.1 in-lb]	15°	10°	90°	ATEX/IEC Ex/INMETRO certified	–
	1172CX2	Epoxy-coated aluminum	Short	Momentary	BZ (2), SPDT each	F (1 A)	1,25 Nm [11.1 in-lb]	15°	10°	90°	–	Gold-plated switch contacts
	11CX5C	Epoxy-coated aluminum	Short	Momentary	BZ (2), SPDT each	A (15 A)	1,25 Nm [11.1 in-lb]	15°	10°	90°	Low-temperature seals	1 switch operates CW, 1 switch operates CCW
	11CX212	Epoxy-coated aluminum	Short	Maintained	BZ (2), SPDT each	A (15 A)	0,5 Nm [4.42 in-lb]	15°	10°	90°	–	Cam provides ~ 30° actuation in 360° rotation for each basic switch
	12CX12	Epoxy-coated aluminum	Short	Maintained	BA (2), SPDT each	B (20 A)	0,5 Nm [4.42 in-lb]	15°	10°	90°	–	–
	12CX12-D01	Epoxy-coated aluminum	Short	Maintained	BA (2), SPDT each	B (20 A)	0,5 Nm [4.42 in-lb]	15°	10°	90°	Flat shaft for direct coupling	–
	12CX15-D01	Epoxy-coated aluminum	Short	Maintained	BA (2), SPDT each	B (20 A)	0,5 Nm [4.42 in-lb]	15°	10°	90°	Flat shaft for direct coupling	1 switch operates CW, 1 switch operates CCW
	12CX2	Epoxy-coated aluminum	Short	Momentary	BA (2), SPDT each	B (20 A)	1,25 Nm [11.1 in-lb]	15°	10°	90°	–	–
	12CX2A	Epoxy-coated aluminum	Short	Momentary	BA (2), SPDT each	B (20 A)	1,25 Nm [11.1 in-lb]	15°	10°	90°	Threaded mounting holes, side (8)	–
	12CX2AE	Epoxy-coated aluminum	Short	Momentary	BA (2), SPDT each	B (20 A)	1,25 Nm [11.1 in-lb]	15°	10°	90°	Threaded mounting holes, side (8), ATEX/IEC Ex/INMETRO certified	–
	12CX5E	Epoxy-coated aluminum	Short	Momentary	BA (2), SPDT each	B (20 A)	1,25 Nm [11.1 in-lb]	15°	10°	90°	ATEX/IEC Ex/INMETRO certified	1 switch operates CW, 1 switch operates CCW
	12CX200	Epoxy-coated aluminum	Short	Maintained	BA (2), SPDT each	B (20 A)	0,5 Nm [4.42 in-lb]	–	–	–	–	Cam provides approximately 30° actuation in 360° rotation for each basic switch
	14CX1E	Epoxy-coated aluminum	Short	Momentary	DT (1), DPDT	C (10 A)	1,25 Nm [11.1 in-lb]	30°	25°	75°	ATEX/IEC Ex/INMETRO certified	–
	16CX1	Epoxy-coated aluminum	Short	Momentary	HS (1), SPDT	D (1 A)	1,25 Nm [11.1 in-lb]	30°	20°	75°	–	Hermetically sealed basic switches
	16CX1E	Epoxy-coated aluminum	Short	Momentary	HS (1), SPDT	D (1 A)	1,25 Nm [11.1 in-lb]	30°	20°	75°	ATEX/IEC Ex/INMETRO certified	Hermetically sealed basic switches
	16CX2	Epoxy-coated aluminum	Short	Momentary	HS (2), SPDT each	D (1 A)	1,25 Nm [11.1 in-lb]	30°	20°	75°	–	Hermetically sealed basic switches
	16CX2C	Epoxy-coated aluminum	Short	Momentary	HS (2), SPDT each	D (1 A)	1,25 Nm [11.1 in-lb]	30°	20°	75°	Low-temperature seals	Hermetically sealed basic switches
	16CX12	Epoxy-coated aluminum	Short	Maintained	HS (2), SPDT each	D (1 A)	0,5 Nm [4.42 in-lb]	30°	20°	75°	–	Hermetically sealed basic switches
	21CX4	Epoxy-coated aluminum	Standard	Momentary	BZ (4), SPDT each	A (15 A)	1,25 Nm [11.1 in-lb]	15°	10°	90°	–	–
	21CX12F	Epoxy-coated aluminum	Standard	Maintained	BZ (2), SPDT each	A (15 A)	0,5 Nm [4.42 in-lb]	15°	10°	90°	–	Two basic switches. 4 sets of cams & return springs
	21CX14	Epoxy-coated aluminum	Standard	Maintained	BZ (4), SPDT each	A (15 A)	0,5 Nm [4.42 in-lb]	15°	10°	90°	–	–
	22CX4	Epoxy-coated aluminum	Standard	Momentary	BA (4), SPDT each	B (20 A)	1,25 Nm [11.1 in-lb]	15°	10°	90°	–	–
	24CX2	Epoxy-coated aluminum	Standard	Momentary	DT (2), DPDT each	C (10 A)	1,25 Nm [11.1 in-lb]	30°	25°	75°	–	–
	26CX4	Epoxy-coated aluminum	Standard	Momentary	HS (4) SPDT each	D (1 A)	1,25 Nm [11.1 in-lb]	30°	20°	75°	–	Hermetically sealed basic switches
	26CX14	Epoxy-coated aluminum	Standard	Maintained	HS (4) SPDT each	D (1 A)	0,5 Nm [4.42 in-lb]	30°	20°	75°	–	Hermetically sealed basic switches
	26CX16	Epoxy-coated aluminum	Standard	Maintained	HS (4) SPDT each	D (1 A)	0,5 Nm [4.42 in-lb]	30°	20°	75°	–	Hermetically sealed basic switches, two switches operate CW, two switches operate CCW
	74CX2	Bronze	Standard	Momentary	DT (2) DPDT each	D (10 A)	1,25 Nm [11.1 in-lb]	30°	25°	75°	–	Threaded mounting holes, side (8)
	81CX2	Bronze	Standard	Momentary	BZ (2) SPDT each	A (15 A)	1,25 Nm [11.1 in-lb]	15°	10°	90°	–	–
	82CX2A	Bronze	Standard	Momentary	BA (2) SPDT each	B (20 A)	1,25 Nm [11.1 in-lb]	15°	10°	90°	Threaded mounting holes, side (8)	–

[1] Basic switches operate nearly simultaneously in multiple switch devices
[2] Shafts of devices without spring return can be rotated through 360°
All catalog listings do not carry all certifications. International Certifications are product specific and available upon request. Please contact Honeywell for assistance.

ASSEMBLY MODIFICATIONS

Modifies Shaft Enables Direct Coupling

CX switches are available with a 3/8-inch diameter by 3/4-inch long flatted shaft which conforms to standard NEMA motor shaft specifications. It accepts commercially available shaft couplers, permitting easy, direct coupling to most equipment actuators.

To specify a "direct-couple" CX switch: Add-DO1 to catalog listings shown in the order guides, i.e. 11CX12-DO1.

Flatted Shaft Version

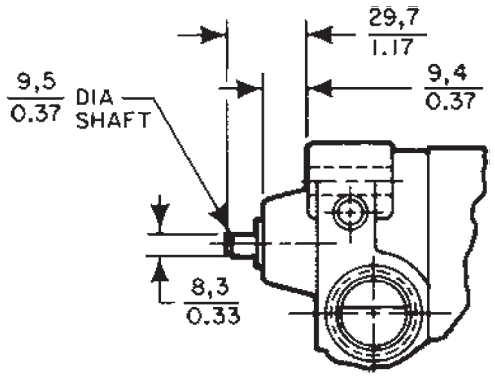

Mounting Holes

Add the letter A to listings with side mounting holes tapped 5/16-18(8). Example: 11CX2A

Add the letter B to listings with thru mounting holes tapped 3/8-24(4). Example: 11CX2B.

CX Series Replacement Basic Switch Assemblies

These assemblies are factory-adjusted to the same operating characteristics as a new CX switch. They include components subject to mechanical or electrical wear: basic switches, cams, cam followers and springs.

To order, change the first number in the complete switch catalog listing to 9 for rotary switches. For example:

Rotary switch 11CX2 Replacement = 91CX2

Note: Basic switch assemblies for rotary-actuated switches, with or without spring return, will be the same.

For example: 11CX2 and 11CX12 use 91CX2.

Low-Temperature Switches

Add the letter C to listings for low temperature versions
For example: 21CX14C = -40°F [-40°C] Rotary

Mounting Brackets

15PA500-CX adapter bracket for mounting CX products to NAMUR footprint is available upon request.

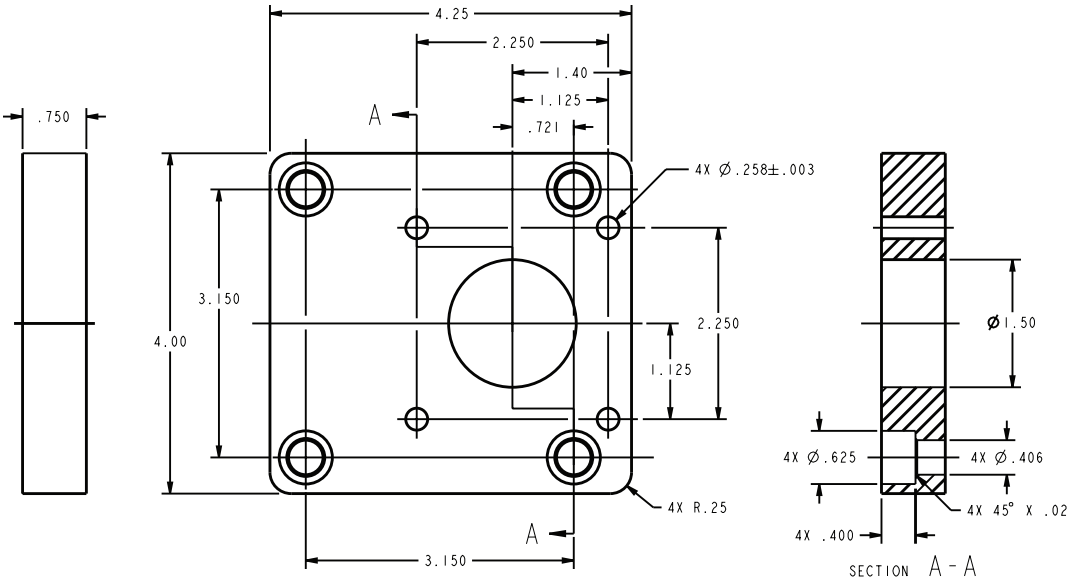

MICRO SWITCH WEATHER-SEALED, EXPLOSION PROOF SWITCHES
CX SERIES

Levers for use with side-rotary-actuated switches are available in a wide choice of sizes and materials. The most common listings are shown below. Rollers may be on either side of the lever to best match the external actuating mechanism.

TABLE 4. ROTARY LEVERS

Fixed lever, nylon roller LSZ51A — front-mount roller LSZ51C — back-mount roller	Short fixed lever, nylon roller LSZ59A — front-mount roller LSZ59C — back-mount roller	Offset lever, nylon roller LSZ55A — back-mount roller LSZ55C — front-mount roller
		

One-way lever, nylon roller LSZ60A — front-mount roller	Yoke lever, nylon rollers LSZ53A — front/back-mount rollers	LSZ67CA** Plastic conveyor roller	LSZ68 rod w/ spring 305 mm [12 in]
	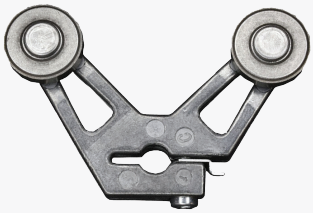		

Adj. lever, nylon roller LSZ52A back-mount roller LSZ52C front-mount roller	LSZ52J adjustable lever, nylon roller 25,4 mm [1 in]	LSZ52K adjustable lever, nylon roller 38,1 mm [1.5 in]	LSZ54M aluminum rod 140 mm [5.5 in]	LSZ61 loop 152 mm [6 in]
		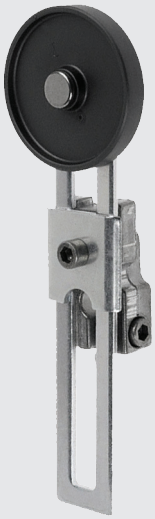		

** May require orientation of switch and lever to enable gravity to help restore switch's free position.

Non-sparking rollers and actuators must be used in hazardous areas.

MICRO SWITCH WEATHER-SEALED, EXPLOSION PROOF SWITCHES
CX SERIES

TABLE 5. ROTARY LEVERS ORDER GUIDE

	Catalog Listing	Material	Roller Dia. mm [in]	Roller Width mm [in]	Roller Mounting
Fixed – 38,1 mm [1.5 in] radius					
	LSZ51	Rollerless	n/a	n/a	n/a
	LSZ51A	Nylon	19 [0.75]	6,35 [0.25]	Front
	LSZ51C	Nylon	19 [0.75]	6,35 [0.25]	Back
	LSZ51F	Nylon	25,4 [1.0]	12,7 [0.50]	Front
	LSZ51G	Nylon	38,1 [1.5]	6,35 [0.25]	Front
	LSZ51J	Nylon	25,4 [1.0]	12,7 [0.50]	Back
	LSZ51M	Nylon	19 [0.75]	31,7 [1.25]	Back
	LSZ51P	Nylon	19 [0.75]	12,7 [0.50]	Front
	LS2Z51A (sst)	Nylon	19 [0.75]	6,35 [0.25]	Front
	LS2Z51C (sst)	Nylon	19 [0.75]	6,35 [0.25]	Back
	LS2Z51E (sst)	Copper alloy	19 [0.75]	6,35 [0.25]	Front
	LS2Z51F (sst)	Copper alloy	19 [0.75]	6,35 [0.25]	Back
Adjustable – 38,1 mm [1.5 in] to 88,9 mm [3.5 in] radius					
	LSZ52	Rollerless	n/a	n/a	n/a
	LSZ52A	Nylon	19 [0.75]	6,35 [0.25]	Back
	LSZ52C	Nylon	19 [0.75]	6,35 [0.25]	Front
	LSZ52E	Nylon	19 [0.75]	33,0 [1.30]	Front
	LSZ52J	Nylon	25,4 [1.0]	12,7 [0.50]	Front
	LSZ52K	Nylon	38,1 [1.5]	6,35 [0.25]	Front
	LSZ52M	Nylon	50,8 [2.0]	6,35 [0.25]	Front
	LSZ52N	Nylon	19 [0.75]	12,7 [0.50]	Front
	LS2Z52A (sst)	Nylon	19 [0.75]	6,35 [0.25]	Front
	LS2Z52C (sst)	Nylon	19 [0.75]	6,35 [0.25]	Back
	LS2Z52E (sst)	Copper alloy	19 [0.75]	6,35 [0.25]	Front
	LS2Z52F (sst)	Copper alloy	19 [0.75]	6,35 [0.25]	Back
Yoke – 38,1 mm [1.5 in] radius					
	LSZ53A	Nylon	19 [0.75]	6,35 [0.25]	Front/Back
	LSZ53E	Nylon	19 [0.75]	6,35 [0.25]	Back/Front
	LSZ53M	Nylon	19 [0.75]	31,7 [1.25]	Back/Front
	LSZ53S	Nylon	19 [0.75]	6,35 [0.25]	Back/Back
Rod					
	LSZ54	Hub only	n/a	n/a	n/a
	LSZ54M	Alum, 140 mm [5.5 in]	Ø 3,2 [Ø 0.125]	n/a	n/a
	LSZ54N	Stainless, 330 mm [13 in]	Ø 3,2 [Ø 0.125]	n/a	n/a
	LSZ54P	Plastic rod, 305 mm [12 in]	Ø6,85 [Ø 0.27]	n/a	n/a
	LSZ54W	Plastic rod, 183 mm [7.2 in]	Ø6,85 [Ø 0.27]	n/a	n/a
Offset – 38,1 mm [1.5 in] radius					
	LSZ55	Rollerless	n/a	n/a	n/a
	LSZ55A	Nylon	19 [0.75]	6,35 [0.25]	Back
	LSZ55C	Nylon	19 [0.75]	6,35 [0.25]	Front
	LSZ55E	Nylon	19 [0.75]	12,7 [0.50]	Front
	LSZ55K	Nylon	38,1 [1.5]	6,35 [0.25]	Front

All catalog listings do not carry all certifications. International Certifications are product specific and available upon request. Please contact Honeywell for assistance.

MICRO SWITCH WEATHER-SEALED, EXPLOSION PROOF SWITCHES
CX SERIES

TABLE 5. ROTARY LEVERS ORDER GUIDE

	Catalog Listing	Material	Roller Dia. mm [in]	Roller Width mm [in]	Roller Mounting
Short fixed – 33,02 mm [1.3 in] radius					
	LSZ59A	Nylon	19 [0.75]	6,35 [0.25]	Front
	LSZ59C	Nylon	19 [0.75]	6,35 [0.25]	Back
One-way roller lever					
	LSZ60A	Nylon	19 [0.75]	6,35 [0.25]	Front
Flexible loop					
	LSZ61	Ø 4,8 [Ø 0.19] Nylatron	152 mm [6 in] flexible loop		
	LSZ61B	Ø 4,8 [Ø 0.19] Nylatron	241 mm [9.5 in] flexible loop		
	LSZ54	Hub only	n/a	n/a	n/a
Rubber roller levers					
	LSZ51Y 38,1 [1.5] radius (standard)	Rubber	50 [2.0]	12,7 [0.5]	front
	LSZ55Y 38,1 [1.5] radius (offset)	Rubber	50 [2.0]	12,7 [0.5]	front
	LSZ52Y 38,1 to 89 [1.5 to 3.5] radius (adjustable)	Rubber	50 [2.0]	12,7 [0.5]	front
Plastic roller levers					
	LSZ67AA (conveyor)*	Plastic	38,1 [1.5]	96,5 [3.8]	n/a

* May require orientation of switch and lever to enable gravity to help restore switch to free position.

MICRO SWITCH WEATHER-SEALED, EXPLOSION PROOF SWITCHES
CX SERIES

DIMENSIONS MM[IN]

Figure 1. MICRO SWITCH CX – side rotary standard housing

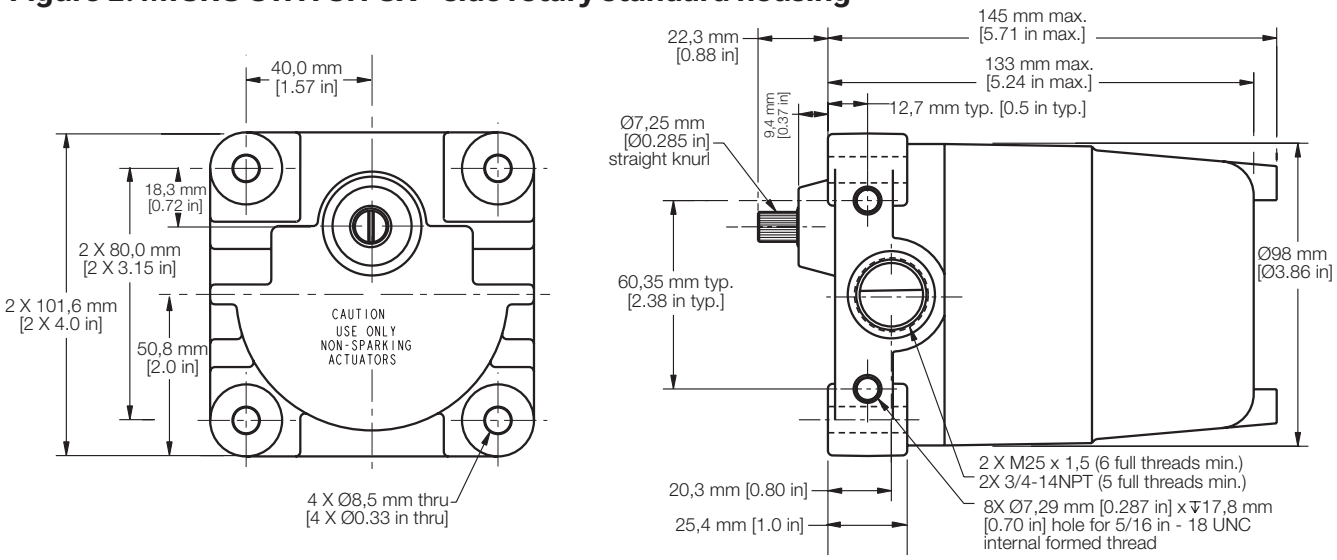

Figure 2. MICRO SWITCH CX – side rotary short housing

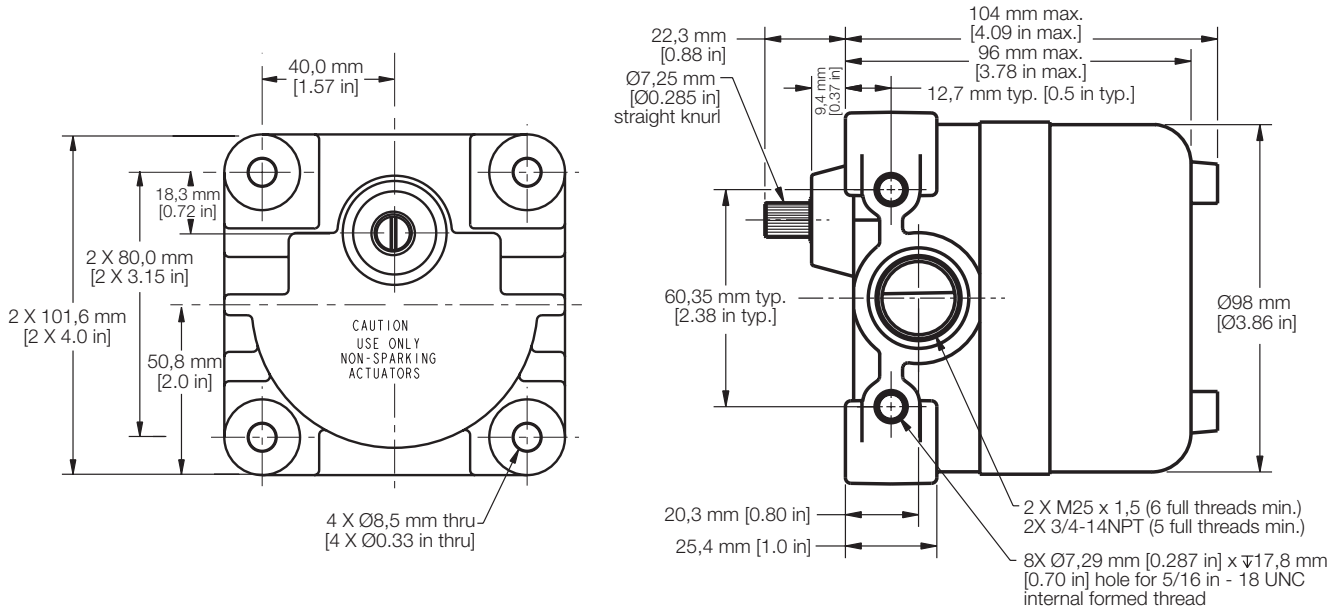

Figure 3. MICRO SWITCH CX – plunger standard and short housing

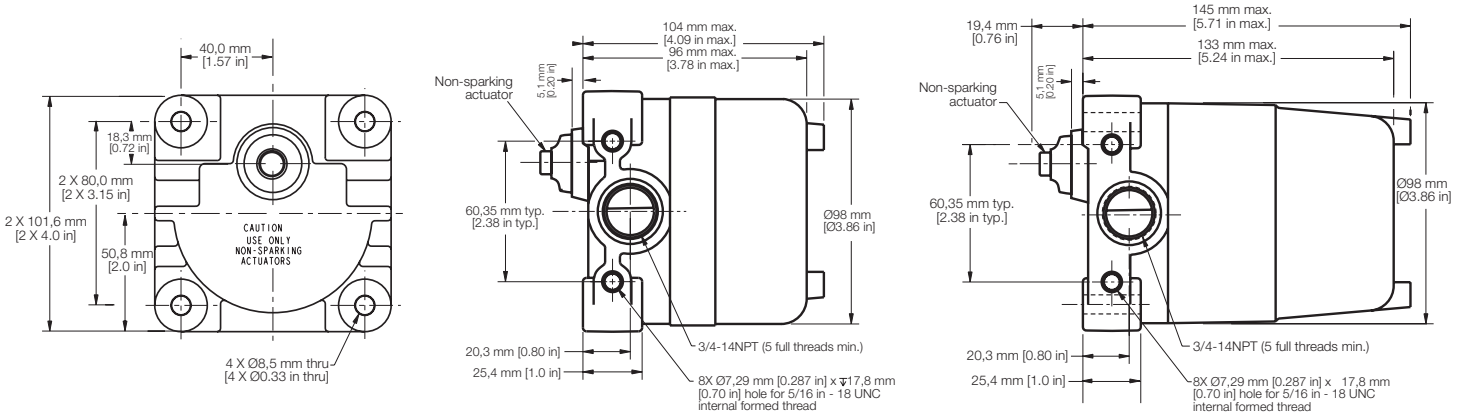

ATEX COVER CLAMP ASSEMBLY

For European Compliance

To specify a CX switch with ATEX, IEC Ex, or INMETRO certifications, add the letter "E" to the end of the catalog listing: 11CX2E.

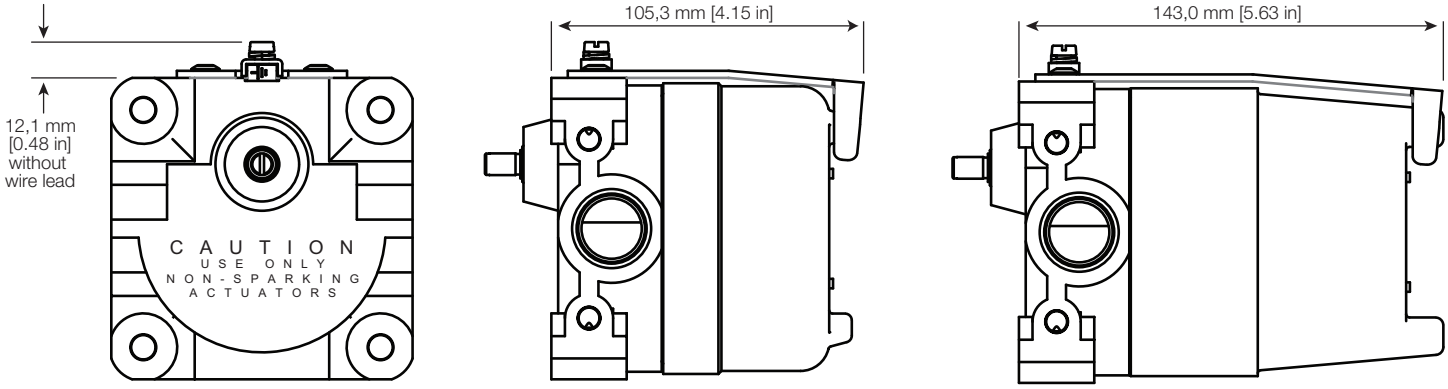

ADDITIONAL MATERIALS

The following associated literature is available on the Honeywell website at sps.honeywell.com/ast:

- Product installation instructions
- Product range guide
- Product nomenclature tree
- MICRO SWITCH Hazardous Area Switches Brochure
- Product application-specific information
  - Limit and enclosed switch reference standards
  - Application Note: Sensors and switches for industrial manual process valves
  - Application Note: Sensors and switches in oil rig applications
  - Application Note: Sensors and switches n valve actuators and valve positioners
  - Application Note: Sensors and switches in valves and flow meters

FOR MORE INFORMATION

Honeywell Advanced Sensing Technologies services its customers through a worldwide network of sales offices and distributors. For application assistance, current specifications, pricing, or the nearest Authorized Distributor, visit sps.honeywell.com/ast or call:

USA/Canada	+302 613 4491
Latin America	+1 305 805 8188
Europe	+44 1344 238258
Japan	+81 (0) 3-6730-7152
Singapore	+65 6355 2828
Greater China	+86 4006396841

Honeywell
Advanced Sensing Technologies
830 East Arapaho Road
Richardson, TX 75081
sps.honeywell.com/ast

WARRANTY/REMEDY

Honeywell warrants goods of its manufacture as being free of defective materials and faulty workmanship during the applicable warranty period. Honeywell's standard product warranty applies unless agreed to otherwise by Honeywell in writing; please refer to your order acknowledgment or consult your local sales office for specific warranty details. If warranted goods are returned to Honeywell during the period of coverage, Honeywell will repair or replace, at its option, without charge those items that Honeywell, in its sole discretion, finds defective. **The foregoing is buyer's sole remedy and is in lieu of all other warranties, expressed or implied, including those of merchantability and fitness for a particular purpose. In no event shall Honeywell be liable for consequential, special, or indirect damages.**

While Honeywell may provide application assistance personally, through our literature and the Honeywell web site, it is buyer's sole responsibility to determine the suitability of the product in the application.

Specifications may change without notice. The information we supply is believed to be accurate and reliable as of this writing. However, Honeywell assumes no responsibility for its use.

⚠ WARNING
IMPROPER INSTALLATION

- Consult with local safety agencies and their requirements when designing a machine-control link, interface and all control elements that affect safety.
- Strictly adhere to all installation instructions.

Failure to comply with these instructions could result in death or serious injury.

⚠ WARNING
MISUSE OF DOCUMENTATION

- The information presented in this product sheet is for reference only. Do not use this document as a product installation guide.
- Complete installation, operation, and maintenance information is provided in the instructions supplied with each product.

Failure to comply with these instructions could result in death or serious injury.

002388-5-EN | 5 | 05/22

Honeywell