THIS DRAWING IS UNPUBLISHED. RELEASED FOR PUBLICATION -,- .
© COPYRIGHT - By - ALL RIGHTS RESERVED.

LOC	DIST
J	—

REVISIONS

P	LTR	DESCRIPTION	DATE	DWN	APVD
	E	REVISED PER ECR-14-007279	04SEP2014	NK	TM

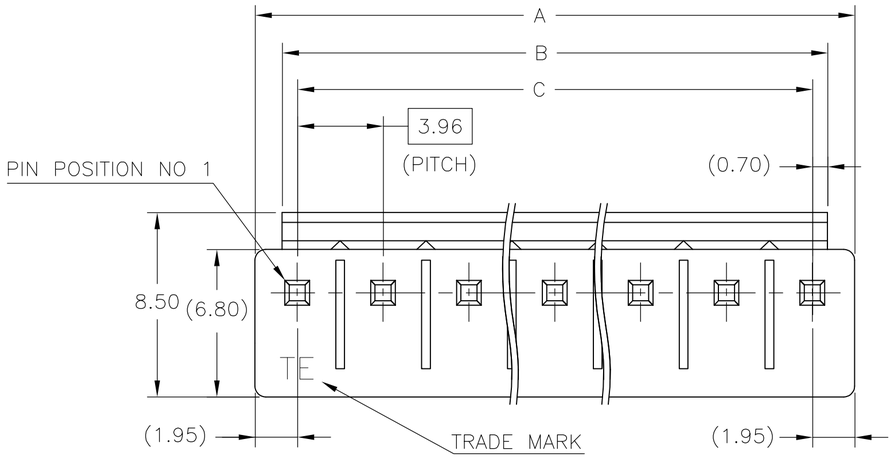

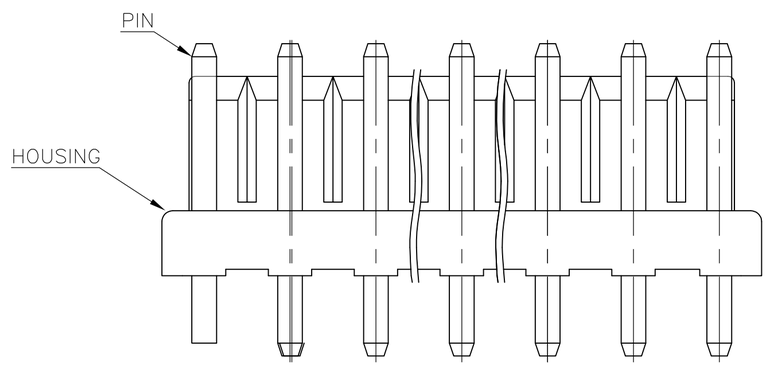

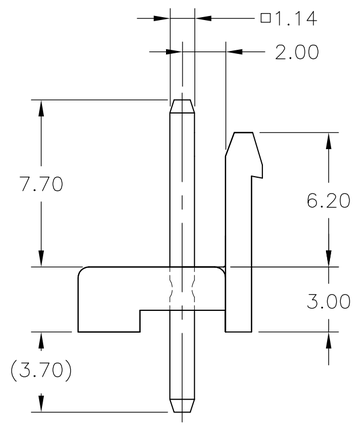

1 MATING CONN P/N: □-1123722-□

2 APPLICABLE P.C.B LAYOUT: SEE FIG. 1

3 APPLICABLE P.C.B THICKNESS: 1.60

4 SKETCHES SHOW NO PINS MISSING.

5 COMPLY WITH GLOW WIRE REQUIREMENTS FOR PARTS OF NON-METALIC MATERIAL SUPPORTING A CURRENT CARRYING CONNECTION DETAILED IN IEC 60335-1 SECTION 30 (GWT [GLOW WIRE TEST]) 750° SPEC.

6 PIN: POST TIN OVER BRASS

7 HOUSING: PBT, 30% GLASS, UL94-V0.

8 o : WITH PIN,
X : WITHOUT PIN.

9 HOUSING: NYLON, 15% GLASS, UL94-V2

10 PRELIMINARY - NOT RELEASED FOR PRODUCTION.

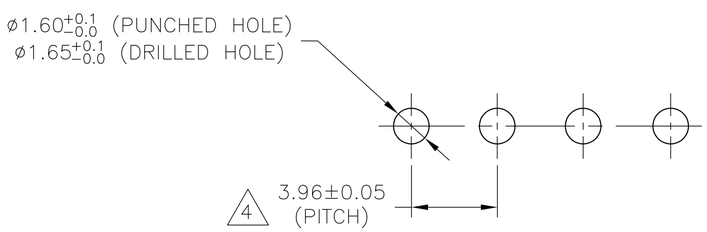

2 FIG.1

GWT 5	HOUSING MATERIAL	1	2	3	4	5	6	7	8	9	10	11	"C"	"B"	"A"	COLOR	POSN	ASS'Y P/N
		PIN POSITION 8											DIMENSION					
YES	9	O	X	O	O	O	O						19.80	21.20	23.70	NATURAL	6	8-1565035-5
NO	7	O	X	O	O	O	O									NATURAL		7-1565035-5
YES	9	O	X	O	X	O	O									NATURAL		9-1565035-4
		O	O	O	X	X	O									NATURAL		8-1565035-4
		O	X	O	X	O	O									NATURAL		7-1565035-4
NO	7	O	X	O	X	O	O									BLACK		5-1565035-4
		O	X	O	X	O	O									RED		10 4-1565035-4
		O	X	O	X	O	O									BLUE		10 3-1565035-4
		O	O	O	X	X	O									NATURAL		2-1565035-4
		O	X	O	X	O	O									NATURAL		1-1565035-4

THIS DRAWING IS A CONTROLLED DOCUMENT.

DIMENSIONS: mm

TOLERANCES UNLESS OTHERWISE SPECIFIED:
0 PLC ±
1 PLC ± 0.50
2 PLC ± 0.30
3 PLC ±
4 PLC ±
ANGLES ±

MATERIAL: SEE TABLE 6

FINISH: 6

DWN	Y.YAMADA	07SEP2004
CHK	N.YAMASAKI	07SEP2004
APVD	N.YAMASAKI	07SEP2004
PRODUCT SPEC	108-5609	
APPLICATION SPEC	—	
WEIGHT	—	

CUSTOMER DRAWING

TE Connectivity

NAME: ECONOMY POWER (EP) CONN HEADER ASS'Y 3.96/7.92mm PITCH SPECIAL

SIZE	CAGE CODE	DRAWING NO	RESTRICTED TO
A2	00779	C-1565035	—

SCALE 5:1 SHEET 1 OF 1 REV E

1565035