Specifications

备注(Remark)
1.材料(MATERIAL)
胶芯：PBT+30%G.F UL94V-0，颜色:黑色.
Housing:PBT+30%G.F UL94V-0,Color:Black
端子：青铜，镍底30u"MIN,表面镀金接触点0.8u"
Contact:Bronze, 0.8u" GOLD PLATING OVER ALL
30u" MIN NICKEL UNDERPLATING OVER ALL
2.特性 (characteristics):
额定电流：3 AMP
Raring Current:3 AMP.
接触阻抗：20 mΩ MAX.
Contact Resistance:20 mΩ MAX.
绝缘阻抗：1000 MΩ MIN.
Insulating Resistance:1000 MΩ MIN.
耐电压：AC 500V/分钟.
Withstanding Voltage:AC 500V/Minute.
温度范围：-40° C to+105° C
Temperture Range: -40° C to+105° C

Ordering Information

F185-12 02 A0 A SY A 2

NO.OF PINS PER ROW	Contact Plating: Full Of Gold	Contact Plating: Semi-gold	INSULATOR MATERIAL:	PACKING
2~40P	A0=0.8u"	B0=0.8U'	A: PBT	A: PE Bag
	A1=1u"	B1=1U'	B: PA6T	B: Tape & Reel
	A2=1.5u"	B2=1.5U'	C: PA9T	C: Tube
	A3=2u"	B3=2U'	D: LCP	D: Tube+CAP
	A4=3u"	B4=3U'		E: Tray
	A5=5u"	B5=5U'		
	A6=10u"	B6=10U'		
	A7=15u"	B7=15U'		
	A8=20u"	B8=20U'		
	A9=30u"	B9=30U'		

S1=Ordinary Tin Plated
S2=Matte Tin Plated
S3=Tin-plated High-temperature

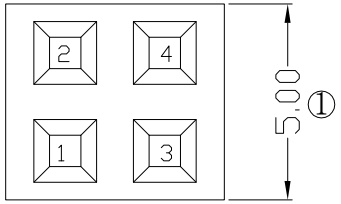

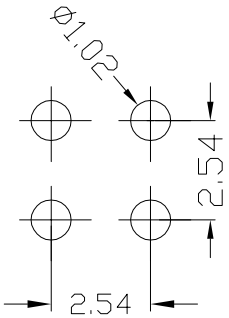

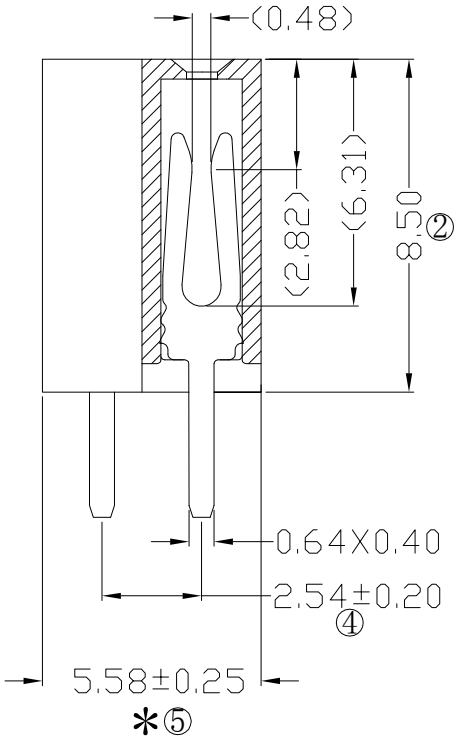

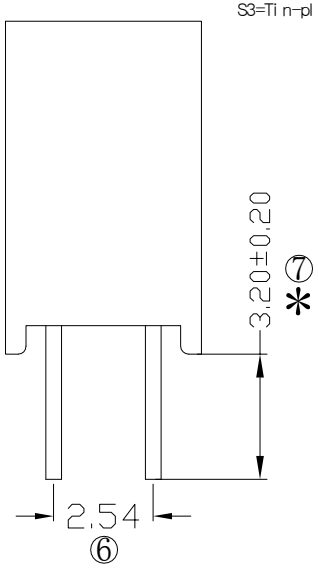

RoHS COMPLIANT

客编：K2942

注意事项	1.带*为品质重点检验尺寸

REV	DATE	SYMBOL	MODIFICATION DESCRIPTION
A0	2021.12.22	/	新版发行

OPERATION	
X.X	±0.25
X.XX	±0.20
X.XXX	±0.10
Angle	±3°
DIM	TOL

SCALE	Fit		
UNIT	MM		
SIZE	A4	DESIGN	李官淼2021.12.22
SHEET	1/1	CHECK	
PROJ.		APPROVE	

Yxcon 东莞市宇熙精密连接器有限公司
www.yxcon.com Dongguan Yuxi Electronic Co.,Ltd.

PART NO.	F185-1202A0ASYA2
TITLE:	2.54排母8.5mm塑高 2*2P 180度 DIP:3.2 Y型 PBT料 (接触点镀金0.8U) 1000个/袋 K2942
Customer No.	