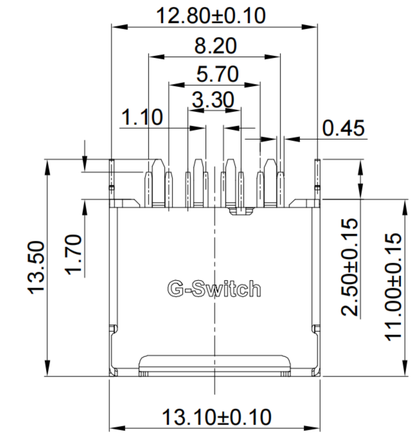

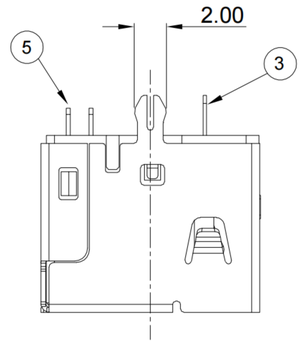

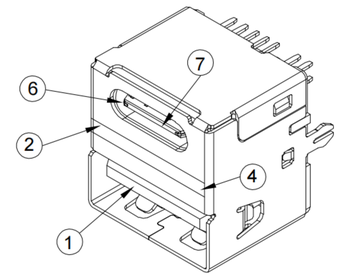

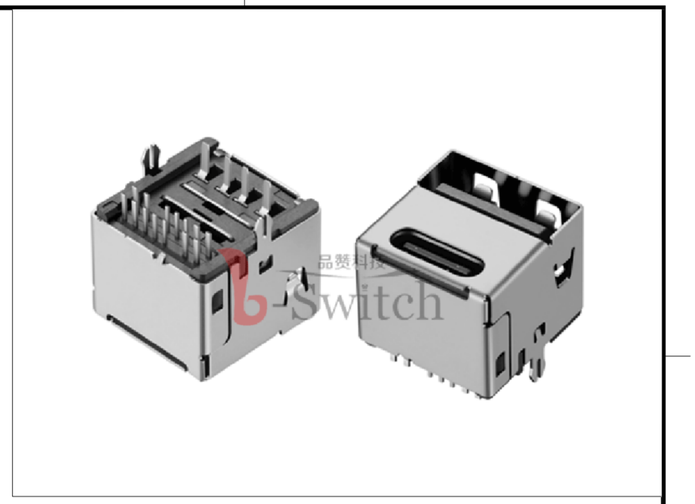

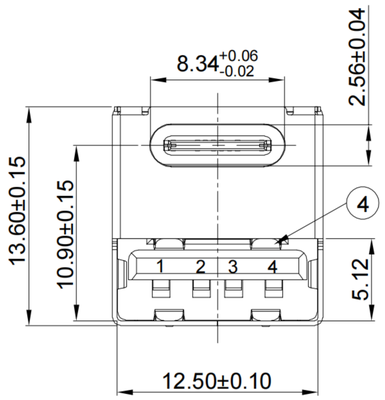

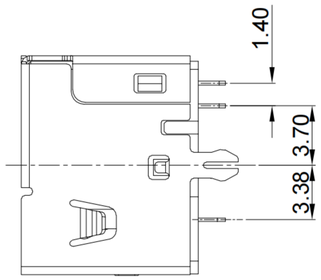

4	GND
3	D+
2	D-
1	VBUS
PIN	NAME
PIN ASSIGNMENT	

G-Switch USB-C Specification:

1.Current rated: 5A on vbus/1.25A
on vconn/0.25A on other
Voltage rating: 30V AC
2.Withstanding voltage: 100V AC/minute
3.Contact resistance: 40mΩ Max
4.Insulation resistance: 100MΩ Min
5.Operating temperature: -40°C ~ +85°C
6.Mating force: 5N~20N
7.Unmating force: 8N~20N
8.Durability cycle:Type A=5,000 cycles;
Type C=10, 000 cycles
9.Salt spray: 24H

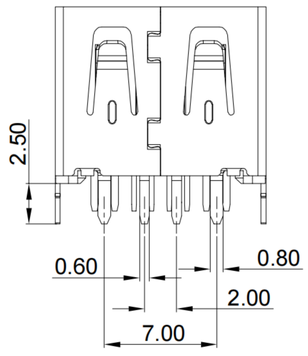

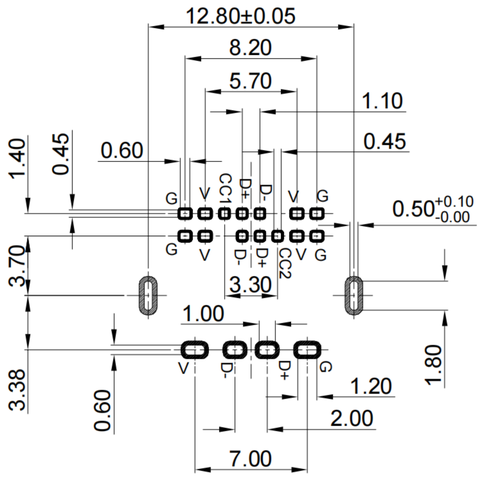

RECOMMENDED PCB LAYOUT
TOLERANCE:±0.05

A1	A2	A3	A4	A5	A6	A7	A8	A9	A10	A11	A12
GND			VBUS	CC1	D+	D-		VBUS			GND
First			First	Second	Second	Second		First			First

B12	B11	B10	B9	B8	B7	B6	B5	B4	B3	B2	B1
GND			VBUS		D-	D+	CC2	VBUS			GND
First			First		Second	Second	Second	First			First

NO.	PARTS	MATERIAL	REMARKS
1	HOUSING	HIGH TEMPERATURE PLASTIC	LCP BLACK UL 94 V-0
2	SHELL	C2680/SPCC	Ni PLATED
3	USB TERMINALS	COPPER ALLOY(C2680)	Au PLATING ON CONTACT AREA
4	Middle Plate	STAINLESS STEEL(SUS201)	--
5	TYPE C TERMINALS	COPPER ALLOY(C2680)	Au PLATING ON CONTACT AREA
6	TYPE C MIDDLE PLATE	COPPER ALLOY(C2680)	--
7	TYPE C MODING	HIGH TEMPERATURE PLASTIC	LCP BLACK UL 94 V-0

Pb Process Capable

RoHS Compliant EU RoHS Standards

HALOGEN Compliant Halogen Free

SCALE: 1:1	UNIT: mm	Title:	Vertical Type-c 14P +USB 2.0 Female DIP H=11.0mm				
SIZE: A4							
Unless otherwise General Tolerance:		Molde Code:	GT-USB-7066A				
X. ±0.50		DRAWN	CHECKED	APPROVED	DATE		
X.x ±0.30							
X.xx ±0.20							
X.xxx ±0.10							
X° ±5°		Xia	Chen	Chen	2023.02.01	REV: A0	SHEET: 1/1

品赞科技 b-Switch ®
www.dg-switch.com