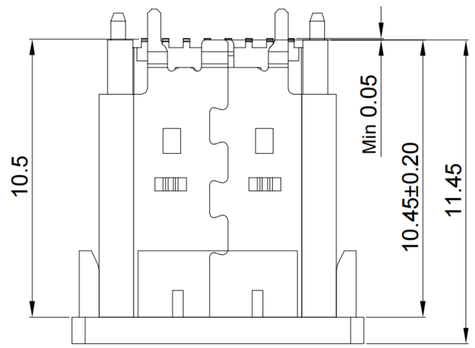

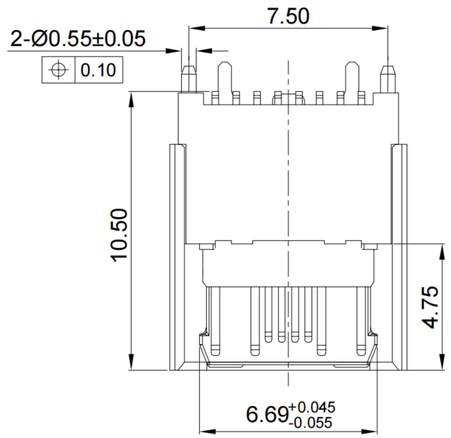

SECTION B-B

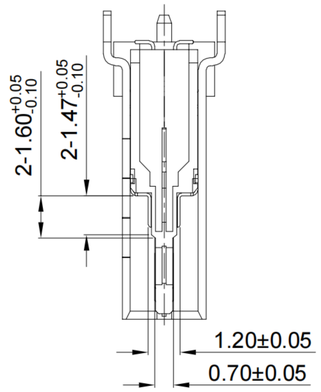

SECTION A-A

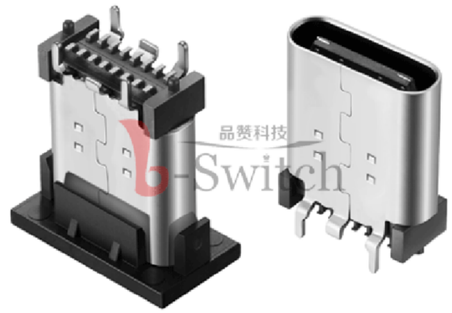

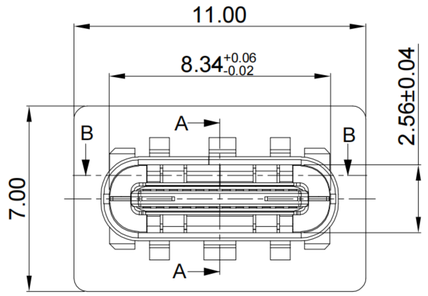

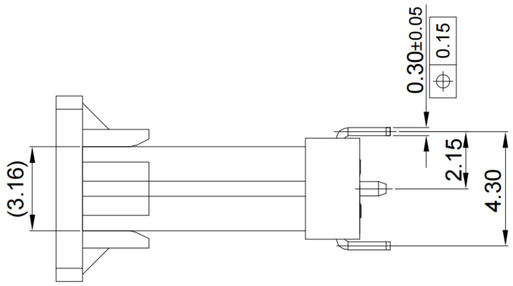

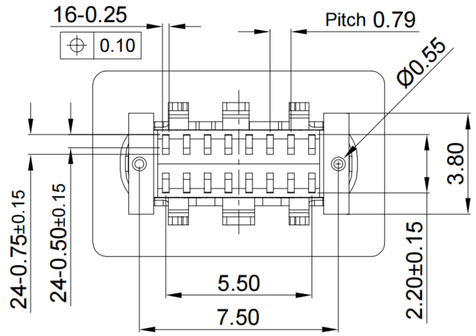

G-Switch USB-C Specification:

1.Current rated: 5A on vbus/1.25A
on vconn/0.25A on other
Voltage rating: 24V AC
2.Withstanding voltage: 100V AC/minute
3.Contact resistance: 40mΩ Max
4.Insulation resistance: 100MΩ Min
5.Operating temperature: -40°C ~ +85°C
6.Mating force: 5N~20N
7.Unmating force: 8N~20N
8.Durability cycle:10,000 cycles

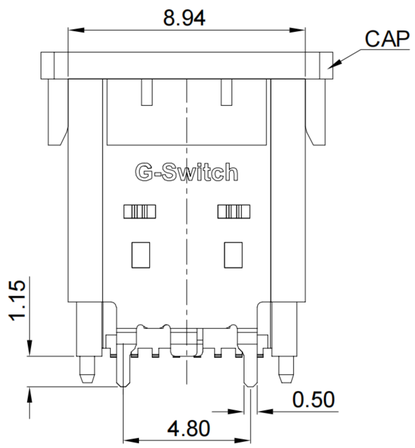

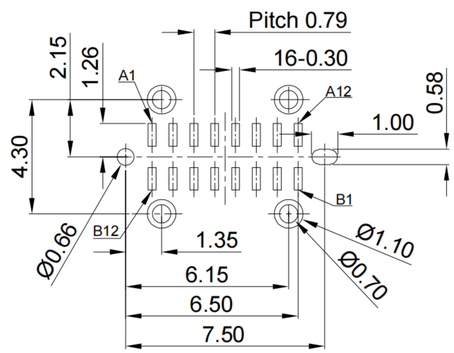

RECOMMENDED PCB LAYOUT
TOLERANCE:±0.05

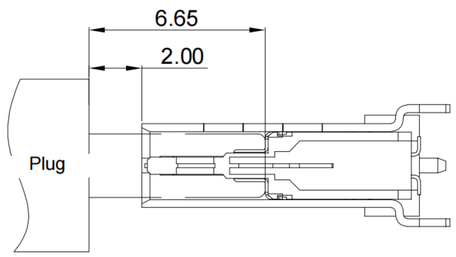

AFTER MATING

A1	A2	A3	A4	A5	A6	A7	A8	A9	A10	A11	A12
GND			VBUS	CC1	D+	D-	SBU1	VBUS			GND
First			First	Second	Second	Second	Second	First			First

B12	B11	B10	B9	B8	B7	B6	B5	B4	B3	B2	B1
GND			VBUS	SBU2	D-	D+	CC2	VBUS			GND
First			First	Second	Second	Second	Second	First			First

NO.	PARTS	MATERIAL	REMARKS
1	SHELL	STAINLESS STEEL	SUS304 Ni PLATED
2	EMI	STAINLESS STEEL	SUS316L Ni PLATED
3	MID PLATE	STAINLESS STEEL	SUS304 Ni PLATED
4	HOUSING	HIGH TEMPERATURE PLASTIC	LCP BLACK UL 94 V-0
5	TERMINALS	COPPER ALLOY C7025	Au PLATING ON CONTACT AREA

Pb Process Capable

RoHS Compliant EU RoHS Standards

HALOGEN Compliant Halogen Free

SCALE: 1:1 UNIT: mm
SIZE: A4

Unless otherwise General Tolerance:

X.	±0.25
X.x	±0.20
X.xx	±0.15
X.xxx	±0.10
X°	±5°

Title: Vertical Type-c 16P Female SMT H=10.50mm

Molde Code: GT-USB-7051A

DRAWN	CHECKED	APPROVED	DATE
Xia	Chen	Chen	2023.02.01

品赞科技 b-Switch ®

REV: A0 SHEET: 1/1