CATEGORY	DESCRIPTION	P/N #
CONNECTOR	RJ45 8P8C 防水连接器焊线式	MJ88F-XX11-ZPN1

REV.	ECN NO	DESCRIPTION	REVISED	DATE
A01	————	New Release	XSY	2015.11.27
A02	————	修改塑胶结构尺寸原0.7改成1.5	XSY	2016.3.1
A03	————	整理图面	WTF	2016.7.1

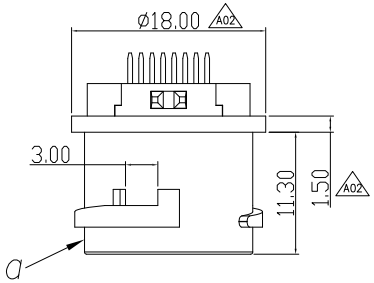

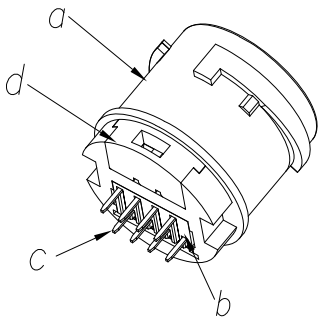

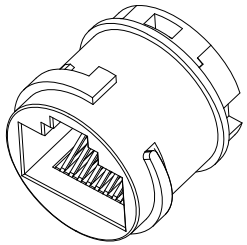

SPECIFICATION
1. VOLTAGE RATING: 150 VAC RMS.
2. CURRENT RATING: 1.5 AMP
3. CONTACT RESISTANCE: 40 mΩ MAX
4. INSULATION RESISTANCE: 500MΩ MIN.
5. WITHSTAND VOLTAGE: AC1000V 60S MIN.
6. OPERATING TEMPERATURE: −40°C~+80°C

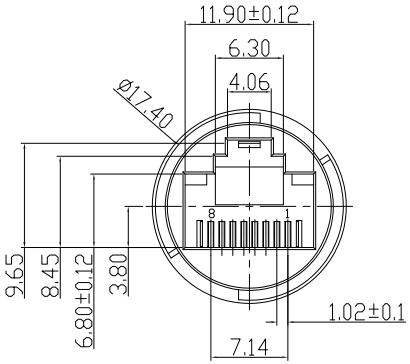

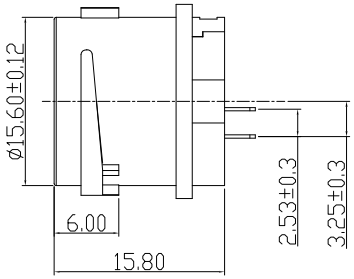

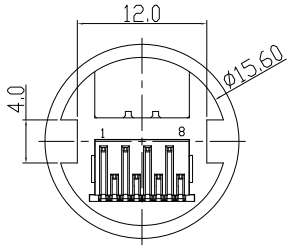

MJ88F-XX11-ZPN1

Table 1

X	塑胶颜色
W	White
B	Black

A03

X	Terminal Plating
0	Au 1u" Plating
1	Au 3u" Plating
2	Au 6u" Plating
3	Au 15u" Plating
4	Au 30u" Plating

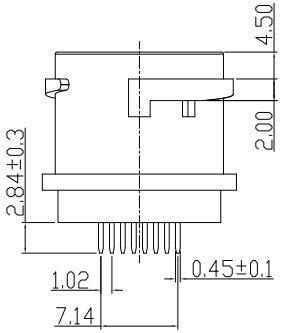

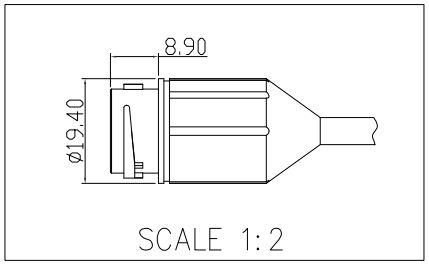

外模成型参考尺寸

NO.	PART NAME	Q'TY	MATERIAL	PLATING & COLOR	ORIGINAL COUNTRY
d	COVER	1	PBT (4830) UL94V-0	See Table 1	
c	TERMINAL	8	PHOSPHOR BRONZE (C5191R-H) T=0.3mm	Au/TIN PALTING/Ni 50u" PLATING	
b	INSERT	1	PA9T (GN2330) UL94V-0	See lable 1	
a	HOUSING	1	PBT (4830) UL94V-0	See Table 1	

UNLESS OTHERWISE SPECIFED TOLERANCES

DECIMALS: X :±0.5, X.X :±0.3, X.XX :±0.2

ANGLES: X :±2°, X.X :±1°

東莞市合陵電子有限公司
DongGuan HeLing Electronic Co.,LTD

SCALE:1/1	UNIT: mm		DWG.NO:
SIZE: A3	PAGE:1 OF 1	REV:A03	

APPROVED BY	CHECKED BY	PREPARED BY
DICK	XSY	WTF

CUSTOMER COPY