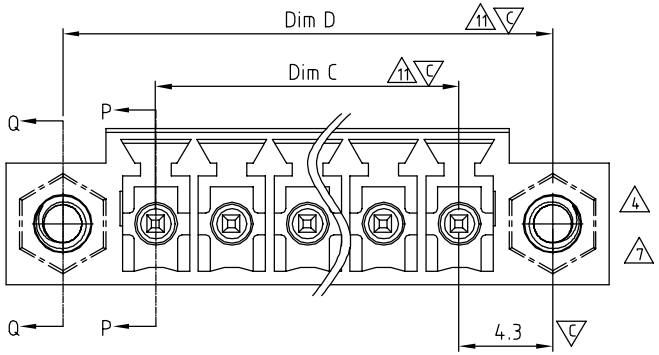

N= Number of contacts

Dim A	(N-1)×3.5+13.8
Dim B	(N-1)×3.5
Dim C	(N-1)×3.5
Dim D	(N-1)×3.5+8.6

2p-6p	±0.15
7p-12p	±0.20
13p-16p	±0.25
17p-24p	±0.30

SIGN	DATE	DESCRIPTION	APPROVER
1	04/20'06	added feature	Marvin
2	8/16'06	Added VDE standard	Steady
3	1/11'07	Soldering temperature changed from 245° to 250°	Tony
4	12/27'07	Body flange is changed	Marvin
5	5/27'08	Operating temperature is changed	Marvin
6	2009.08.18	The material is changed	Jacke
7	2009.08.28	The design is changed from the round hole to hexagonal hole	Jacke
8	2010.07.07	Remove the CSA mark	Chen Bo
9	11/18'11	Flange nut is changed	ChenMing
10	2012.05.14	Voltage rating is changed	Chen Bo
11	2012.05.14	The Dimension Dim C & Dim D are added	Chen Bo

THIS IS CAD DRAWING, DO NOT REVISE MANUALLY!!!

Material:

- Item ⓐ Male contact pin: Copper C1100 Tin plated
- Item ⓑ Terminalhousing): Thermoplastic (UL94V-0)
- Item Ⓒ With flange nut: Brass M2.5

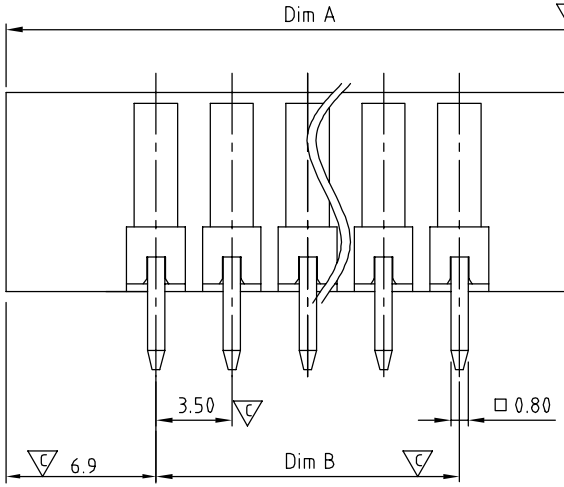

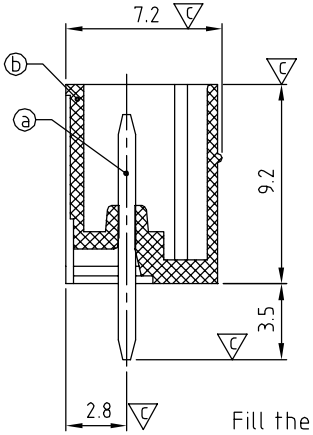

SEC P-P

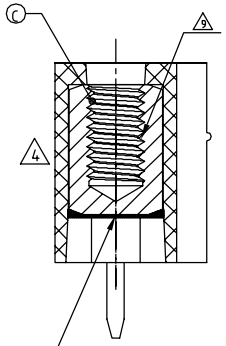

SEC Q-Q

2	Electrical:	cULus /VDE
10	● Voltage rating:	300V/300V
	● Current rating:	10A/10.5A
	● Withstanding Voltage:	1.6 KV/2.5KV
5	● Operating temperature:	-40°C to +115°C
3	● Soldering temperature:	250°C±10°C/5 Sec
8	● Safety Approval:	cULus VDE
	● Critical dimension:	C

OQ xx 1 5 x 0 xxxx G

- No. OF POLES: 02: 2 POLES ... 24: 24 POLES
- Color:
  - 0 Black (RAL9005)
  - 2 Red (RAL3001/D)
  - 3 Orange(RAL2011/P)
  - 4 Yellow(RAL1018/A)
  - 5 Green(RAL6018/T)
  - 6 Blue (RAL5015/A)
  - 8 Grey(RAL7035/D)
- 0000: "@" Logo
- 000A: "ANYTEK" Logo
- Any special item by customer requst. please contact sales department.
- G RoHS compliant (lead<4%) In copper Alloy

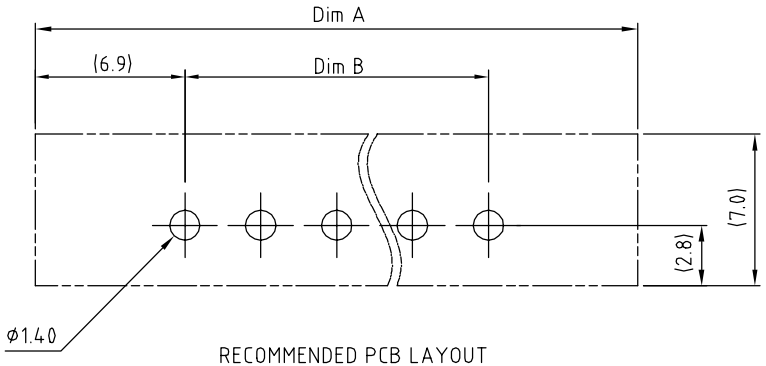

RECOMMENDED PCB LAYOUT

ANYTEK

CUSTOMER COPY

ALL RIGHTS RESERVED. REPRODUCTION OR ISSUE TO THIRD PARTIES IN ANY FORM WHATEVER IS NOT PERMITTED WITHOUT WRITTEN AUTHORITY FROM THE PROPRIETOR. PROPERTY OF ANYTEK TECHNOLOGY CO., LTD

TITLE	OQ 3.5mm 180° Series with flange				
PART NO.	OQxx15x0xxxxG			DWG NO.	8OQ0403
APPROVED	CHECKED	DESIGNED	DRAWN	CUST NO.	
		Chen Bo 05/14`12	Chen Bo 05/14`12	UNIT: mm / SCALE: NONE / SHEET: 01/01 / REV.: N	

Tolerance	
X.	±0.50
X.X	±0.30
X.XX	±0.10
X°	±1°