MOLEX					CUSTOMER			DRAWING LOCATION	CHANGE DESCRIPTION	AFFECTED DEPT
DRAWING NO.	REV	ECN NO.	DATA	P/N	P/N	3D REV	2D REV			
2084850001	A	–	2018/08/24	2084850001	–	–	–	ALL	FIRST RELEASE	AQP/ME/RF/PE
2084850001	B	–	2019/01/14	2084850001	–	–	–	ALL	CHANGE DOCUMENT TYPE, NO DIMENSION CHANGE	AQP/ME/RF/PE
2084850001	C	–	2019/01/22	2084850001	–	–	–	ALL	CHANGE DOCUMENT TYPE, NO DIMENSION CHANGE	AQP/ME/RF/PE

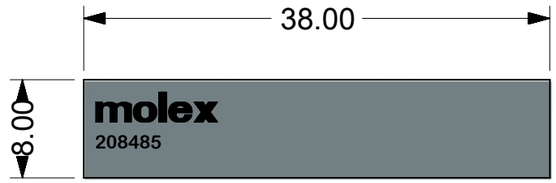

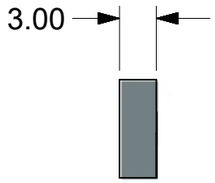

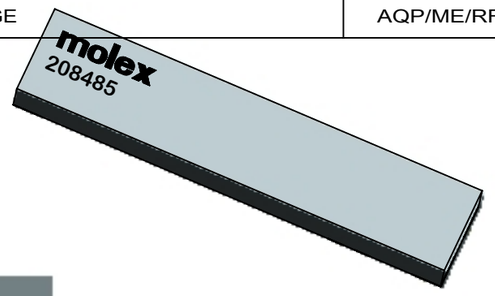

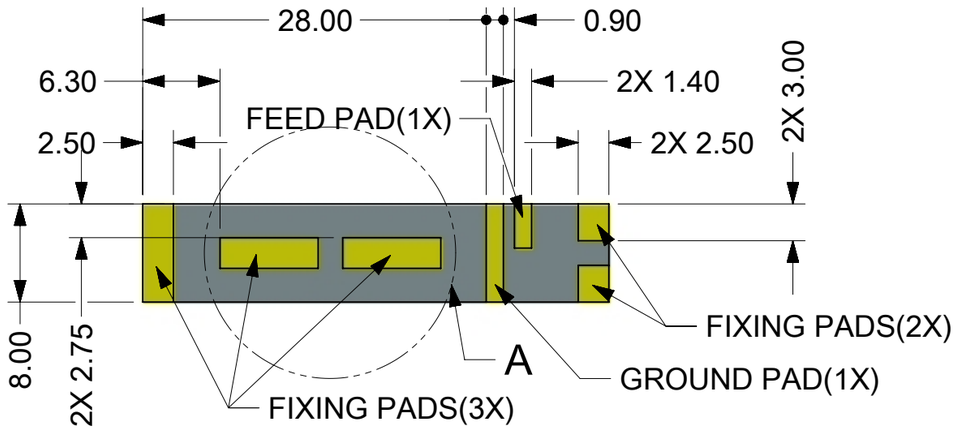

SOLDERING PADS(YELLOW COLOR) WITH CERAMIC BODY

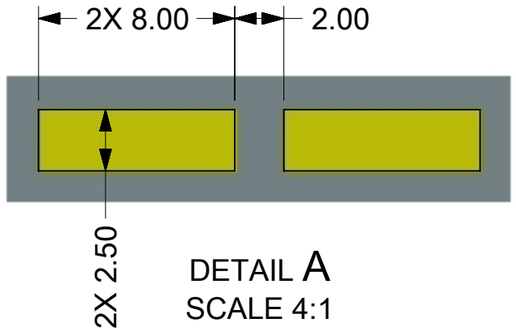

DETAIL A
SCALE 4:1

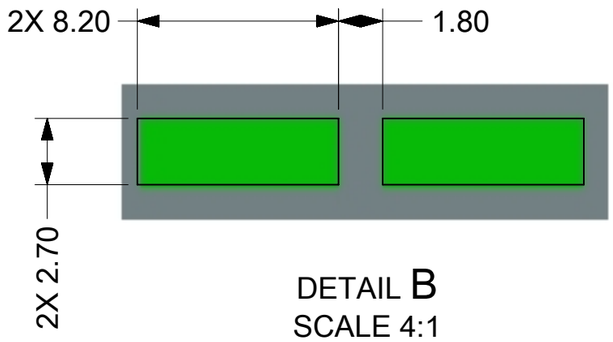

DETAIL B
SCALE 4:1

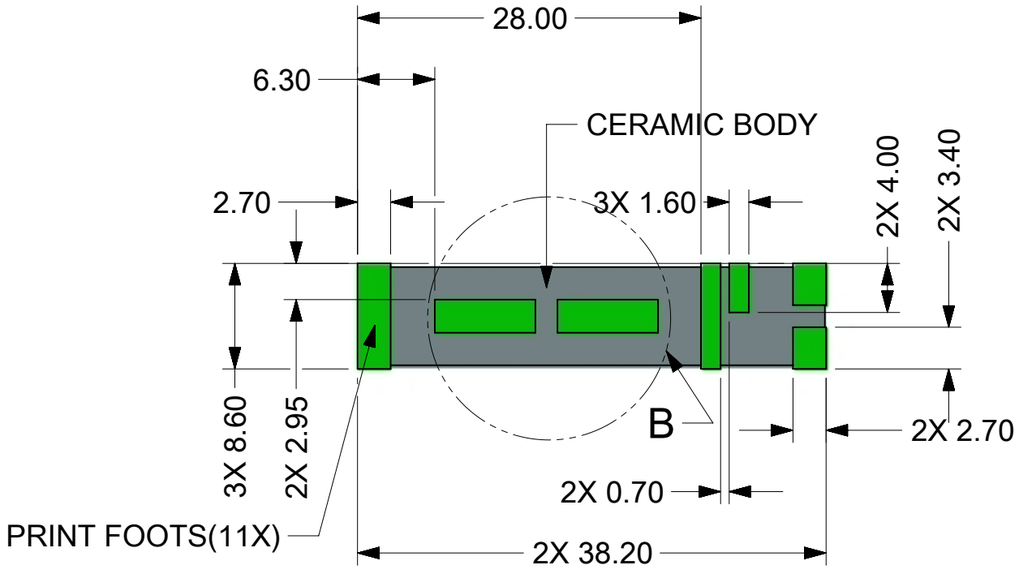

PRINT FOOTS(GREEN COLOR) ON PCB

NOTES:
1. MATERIAL:CERAMIC,P/N:2084850001
2. PATTERN: Ag PRINTED, THICKNESS 3-7um
3. PACKAGE SPEC. REFER TO PK OF 2084850001
4. PRODUCT SPEC. REFER TO PS OF 2084850001
5. APPLICATION SPEC. REFER TO AS OF 2084850001
6. SUGGEST TO USE RED GLUE UNDER PART BEFORE SMT IF APPLICATION CONDITION IS STRICT

SYMBOLS: = 0 / = 0 / = 0 / = 0 / = 0 / = 0 / = 0 / = 0

THIS DRAWING CONTAINS INFORMATION THAT IS PROPRIETARY TO MOLEX ELECTRONIC TECHNOLOGIES, LLC AND SHOULD NOT BE USED WITHOUT WRITTEN PERMISSION

DIMENSION UNITS	SCALE
mm	
GENERAL TOLERANCES (UNLESS SPECIFIED)	
ANGULAR TOL ± °	
4 PLACES	±
3 PLACES	±
2 PLACES	±
1 PLACE	±
0 PLACES	±
DRAFT WHERE APPLICABLE MUST REMAIN WITHIN DIMENSIONS	

CURRENT REV DESC:

EC NO: 610785
DRWN: CZHOU05 2019/01/22
CHK'D: XJSONG 2019/01/22
APPR: XJSONG 2019/01/22

INITIAL REVISION:
DRWN: CZHOU05 2018/11/09
APPR: XJSONG 2018/12/20

THIRD ANGLE PROJECTION | DRAWING: A3-SIZE | SERIES: 208485

molex

600~4000MHZ CERAMIC ANTENNA

PRODUCT CUSTOMER DRAWING

DOCUMENT NUMBER	DOC TYPE	DOC PART	REVISION
2084850001	PSD	SD	C

MATERIAL NUMBER | CUSTOMER | SHEET NUMBER 1 OF 2

DOCUMENT STATUS	P1	RELEASE DATE	2019/01/22 09:28:19

FORMAT: master-tb-prod-A3
REVISION: H
DATE: 2018/01/18

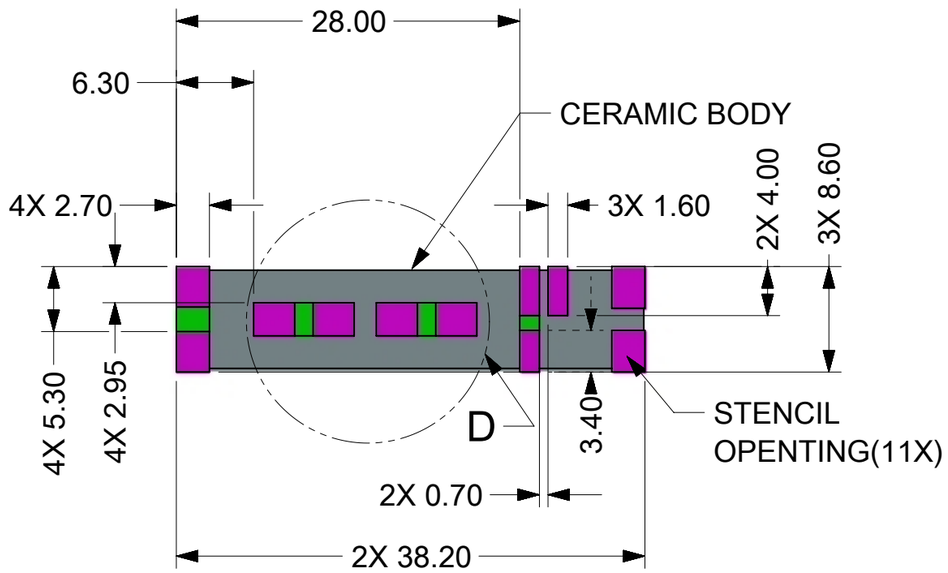

RECOMMENDED STENCIL OPENING(PINK COLOR)

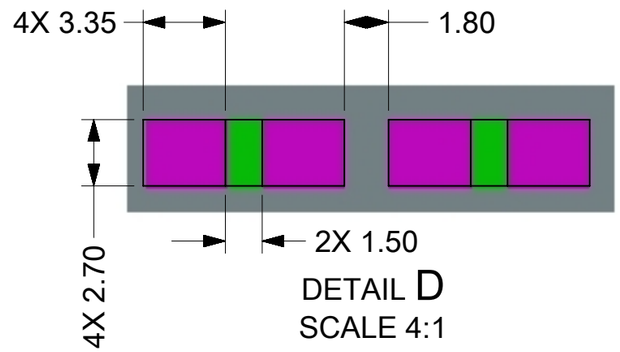

DOCUMENT STATUS	P1	RELEASE DATE	2019/01/22 09:28:19

FORMAT: master-tb-prod-A3
REVISION: H
DATE: 2018/01/18

SYMBOLS	
E/A	= 0
E/C	= 0
E/P	= 0
S	= 0
▼	= 0
C	= 0
☒	= 0
■	= 0
▽	= 0

THIS DRAWING CONTAINS INFORMATION THAT IS PROPRIETARY TO MOLEX ELECTRONIC TECHNOLOGIES, LLC AND SHOULD NOT BE USED WITHOUT WRITTEN PERMISSION

DIMENSION UNITS	SCALE
mm	

GENERAL TOLERANCES (UNLESS SPECIFIED)	
ANGULAR TOL	± °
4 PLACES	±
3 PLACES	±
2 PLACES	±
1 PLACE	±
0 PLACES	±

DRAFT WHERE APPLICABLE MUST REMAIN WITHIN DIMENSIONS

CURRENT REV DESC:

EC NO:	610785	
DRWN:	CZHOU05	2019/01/22
CHK'D:	XJSONG	2019/01/22
APPR:	XJSONG	2019/01/22

INITIAL REVISION:

DRWN:	CZHOU05	2018/11/09
APPR:	XJSONG	2018/12/20

THIRD ANGLE PROJECTION	DRAWING	SERIES
	A3-SIZE	208485

molex

600~4000MHZ CERAMIC ANTENNA

PRODUCT CUSTOMER DRAWING

DOCUMENT NUMBER	DOC TYPE	DOC PART	REVISION
2084850001	PSD	SD	C

MATERIAL NUMBER	CUSTOMER	SHEET NUMBER
		2 OF 2