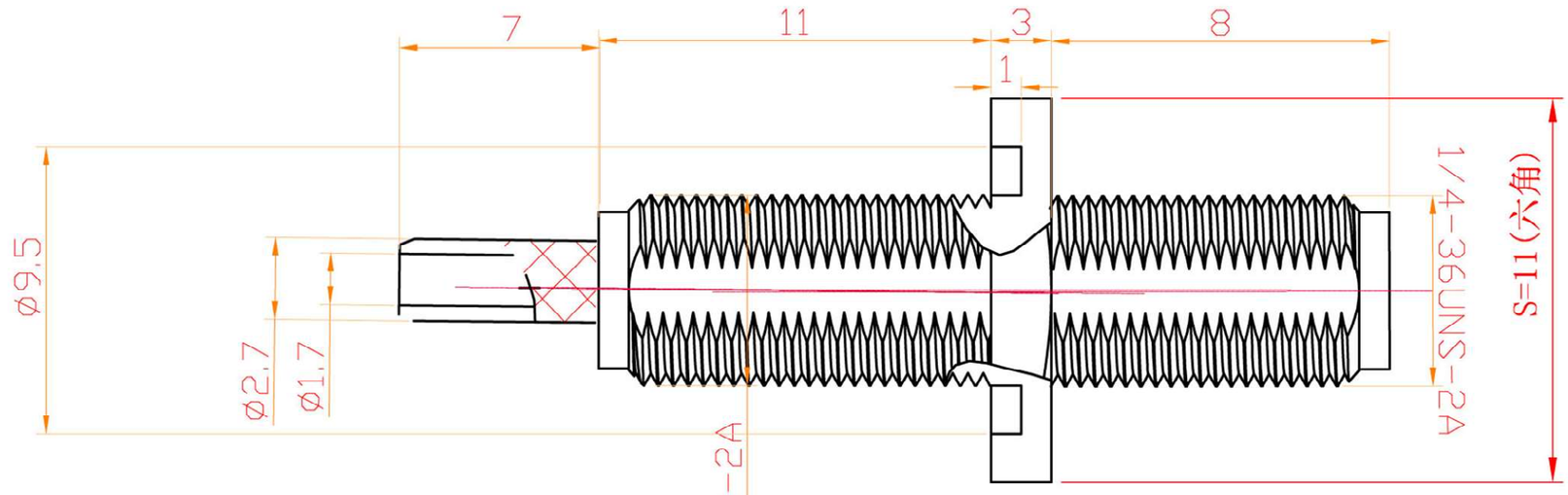

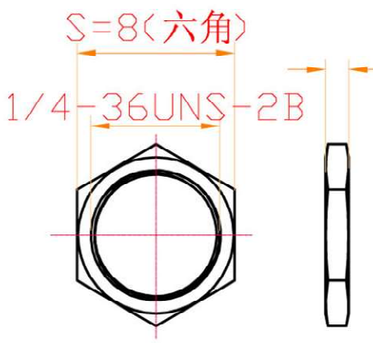

NUT (BRASS、GOLD PLATED)

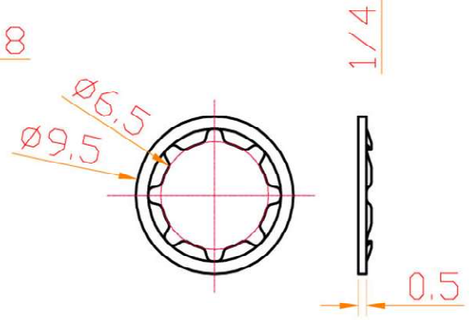

FLOWER MATS (BRASS、GOLD PLATED)

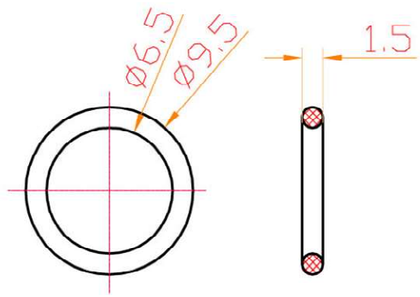

WATERPROOF O-RING (SILICONE-ORING、RED)

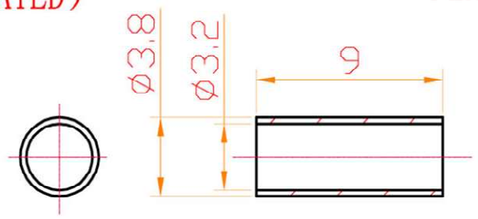

FERRULE (BRASS、NICKEL PLATED)

THERE IS NUT AT THE END OF THE CONNECTOR , DONOT NEEDING nut AT THE FRONT OF THE CONNECTOR

Notes

Impedance 50ohm

Operating Freq 0 – 6GHz

Panel Mount, Straight Body

Durability >500 operations.

Operating Temperature -55 to +155degC

Materials

Pin:	Gold Plated Brass HPb59-1
Insulator	PTFE
Body:	Gold Plated Brass HPb59-1

NOT TO SCALE

TECHNICAL DEPARTMENT

All Dimensions in mm

DESCRIPTION

Waterproof RF Connector SMA Female Crimp For RG316 RG174 LMR100

FILENAME	DRAWN BY	DATE	REVISED	PAGE
CON-SMAF-RG174	John Fairall			1 of 1

REVISIONS

ZONE	REV	DESCRIPTION	DATE	APPROVED
N/A	1	First Issue	29/11/15	
N/A	2	General update to Drawing	27/3/17	
	3			
	4			
	5			
	6			