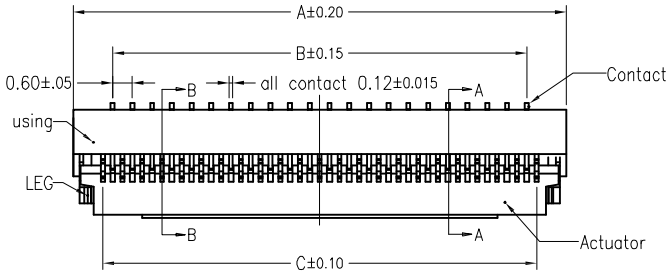

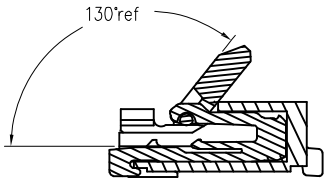

When Actuator Is Opened
Scale 2:1

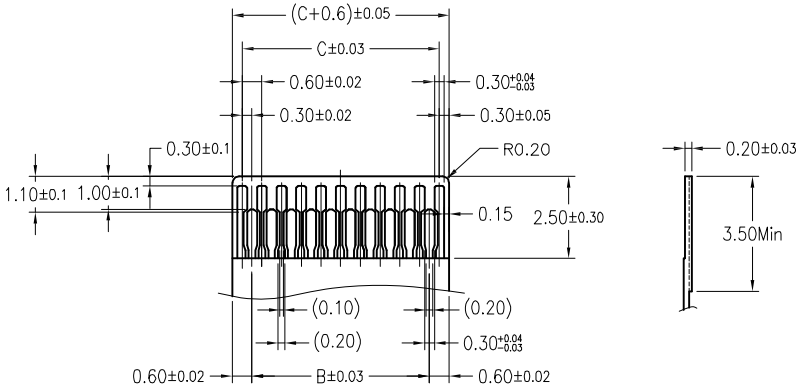

Applicable FPC

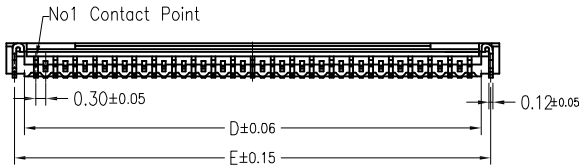

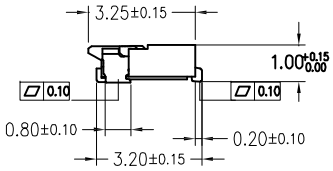

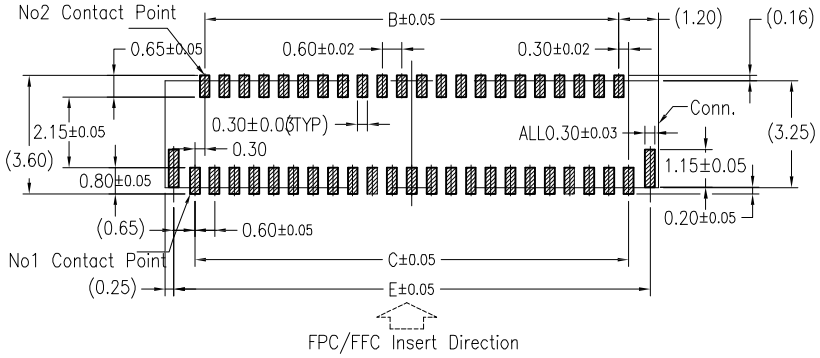

Recommended P.C.B Layout

te:

1.Material
- 1.1: Housing: LCP UL94-V0 Color:Natural.Or Black
- 1.2: Actuator: LCP OR PA UL94-V0 Color:Black Or Natural
- 1.3: Contact: Phosphor Bronze.
- 1.4: LEG: Phosphor Bronze.

2.Plating
- 2.1: Contact: See Part Number.
- 2.2: LEG: Matte Tin Plating Over Nickel.

3.Rating:
- 3.1: Operating Voltage: 30V AC/DC.
- 3.2: Current Rating: 0.2A AC/DC.
- 3.3: Operating Temperature:-55°C~+85°C.

Poles	Part NO.	Dimension				
		A	B	C	D	E
13	F-FPC3M13P-C310	5.40	3.00	3.60	4.25	4.90
15	F-FPC3M15P-C310	6.00	3.60	4.20	4.85	5.50
17	F-FPC3M17P-C310	6.60	4.20	4.80	5.45	6.10
19	F-FPC3M19P-C310	7.20	4.80	5.40	6.05	6.70
21	F-FPC3M21P-C310	7.80	5.40	6.00	6.65	7.30
23	F-FPC3M23P-C310	8.40	6.00	6.60	7.25	7.90
25	F-FPC3M25P-C310	9.00	6.60	7.20	7.85	8.50
27	F-FPC3M27P-C310	9.60	7.20	7.80	8.45	9.10
29	F-FPC3M29P-C310	10.20	7.80	8.40	9.05	9.70
31	F-FPC3M31P-C310	10.80	8.40	9.00	9.65	10.30
33	F-FPC3M33P-C310	11.40	9.00	9.60	10.25	10.90
35	F-FPC3M35P-C310	12.00	9.60	10.20	10.85	11.50
37	F-FPC3M37P-C310	12.60	10.20	10.80	11.45	12.10
39	F-FPC3M39P-C310	13.20	10.80	11.40	12.05	12.70
41	F-FPC3M41P-C310	13.80	11.40	12.00	12.65	13.30
45	F-FPC3M45P-C310	15.00	12.60	13.20	13.85	14.50
49	F-FPC3M49P-C310	16.20	13.80	14.40	15.05	15.70
51	F-FPC3M51P-C310	16.80	14.40	15.00	15.65	16.30
57	F-FPC3M57P-C310	18.60	16.20	16.80	17.45	18.10
61	F-FPC3M61P-C310	19.80	17.40	18.00	18.65	19.30
67	F-FPC3M67P-C310	21.60	19.20	19.80	20.45	21.10
71	F-FPC3M71P-C310	22.80	20.40	21.00	21.65	22.30
73	F-FPC3M73P-C310	23.40	21.00	21.60	22.25	22.90

TOLERANCE TABLE	
.0	±0.30
.00	±0.20
.000	±0.05

APPROVED:	DATE:	Ckmtw 深圳市灿科盟实业有限公司 CHANKLEMENT INDUSTRYCO.,LTD
CHECKED:	DATE:	TITLE: FPC0.3-xP 下接 翻盖式 厚度1.0mm
DRAWN: SXA	DATE: 2016-08-17	PART.NO. /
		UNIT mm SCALE free
		FILE NO. Ckmtw-FPC3-0001 REV. A SLDZ