THIS DRAWING CONTAINS INFORMATION PROPRIETARY TO RF INDUSTRIES,
ANY UNAUTHORIZED USE OF THIS DRAWING IS EXPRESSLY PROHIBITED
WITHOUT WRITTEN PERMISSION FROM RF INDUSTRIES.
ANY VIOLATION IS PUNISHABLE UNDER U.S. COPYRIGHT LAWS.

ALL DIMENSIONS ARE REFERENCE ONLY

PART NO. **RFF-1446-10**

REV	DESCRIPTION	DWN	DATE	APPROVED
–	ENGINEERING RELEASE	CZS	06/11/07	JDMc

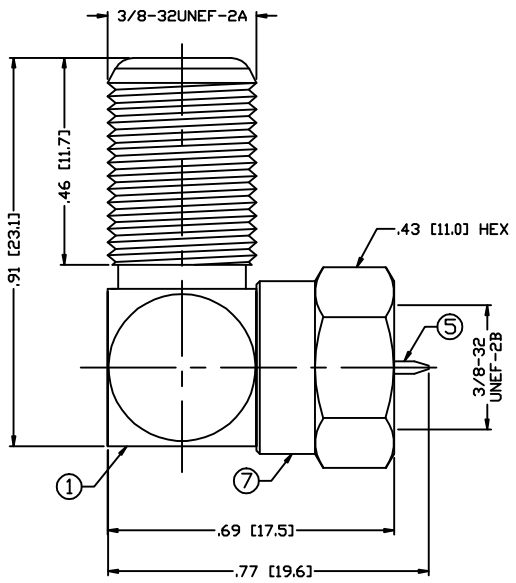

SPECIFICATIONS:

IMPEDANCE: 75 Ohms
FREQUENCY RANGE: DC TO 1 GHz
VOLTAGE RATING: 500 rms @ SEA LEVEL
INSULATION RESISTANCE: 5k M ohms min.
TEMPERATURE RANGE: −40°C TO +85°C

#	DESCRIPTION	QTY	MATERIAL	FINISH
1	BODY	1	BRASS	NICKEL, 100μ"
2	PRESS BODY	1	BRASS	NICKEL, 100μ"
3	CONTACT	1	PHOS. BRONZE	NICKEL, 100μ"
4	INSULATOR	1	DELRIN	---
5	PIN	1	BRASS	NICKEL, 100μ"
6	INSULATOR	1	PE	---
7	SHELL	1	BRASS	NICKEL, 100μ"
8				
9				
10				
11				
12				
13				
14				

000367

APPROVALS	DATE
DRAWN C. ZUNIGA	06/11/07
CHECKED	
ORJ DRAWN C. ZUNIGA	06/11/07

RoHS COMPLIANT

DIMENSIONS ARE IN INCHES AND [MILLIMETERS]
UNLESS OTHERWISE NOTED
TOLERANCES ARE:
DECIMALS | DIAMETER

RF connectors
DIVISION OF RF INDUSTRIES, LTD.
7610 MIRAMAR RD
SAN DIEGO, CA 92126
(858) 549-6340
(858) 549-6345 FAX

F PLUG TO JACK

RIGHT ANGLE, ADAPTER

SIZE	CABLE GROUP	DWG NO.	REV
A	N/A	RFF-1446-10	—

SCALE: NTS | CAD FILE OUTLINE | SHEET 1 OF 1