Transfer or duplication of this doucument as well as the utilisation or communication of its content are not permitted unless express consen is granted. Violations give rise to claims for damages. All rights reserved in case of patent, utility model or design patent registrations.

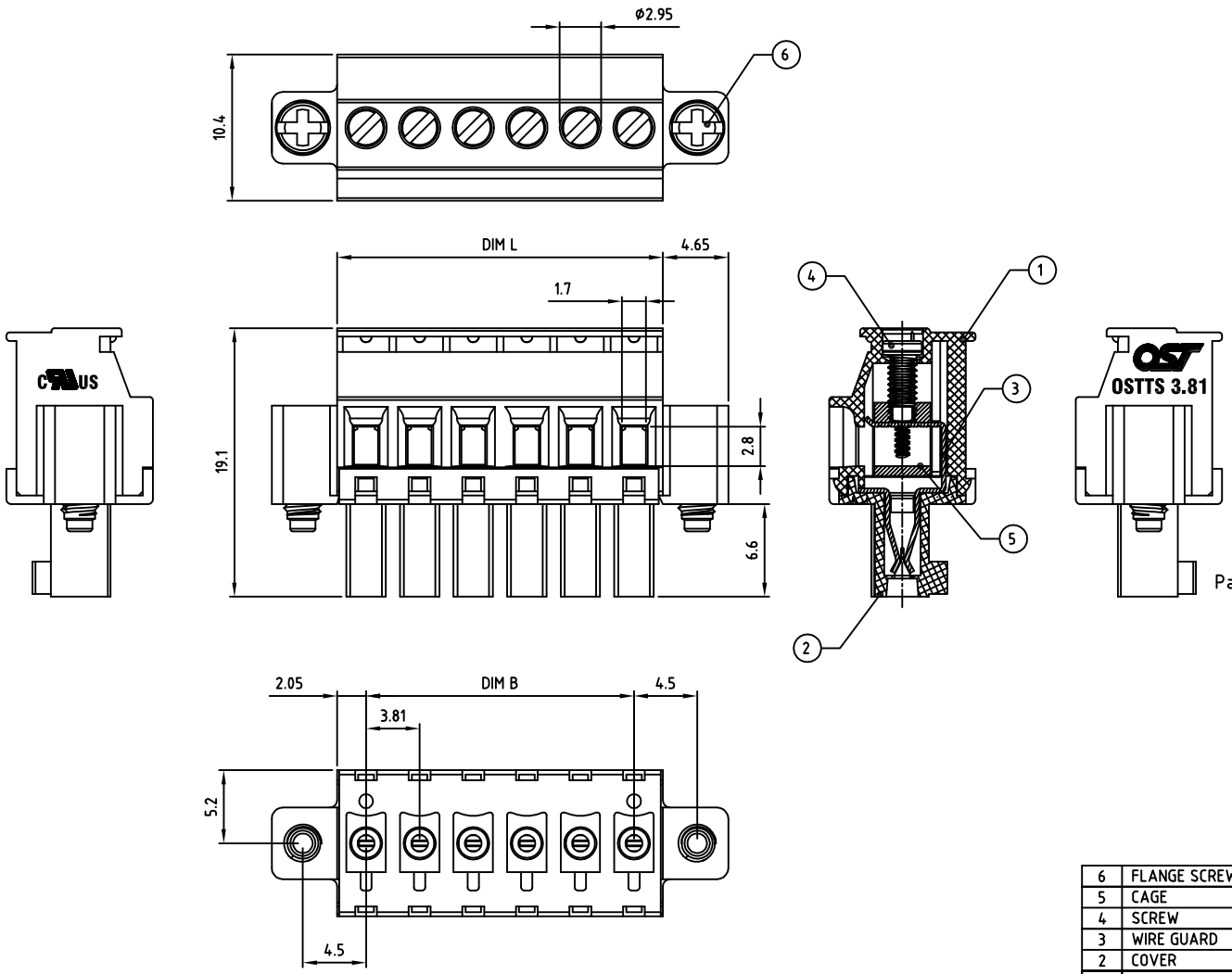


Technical data

1.Nominal voltage: 300V/8A
PITCH:3.81mm

2.Connection capacity:
AWG 30-16

3.Insulation Withstanding Voltage:
AC 1600V/MIN

4.Insulation Resistance:
1000MΩor more at DC500V

5.Tightening torque:
2.3kgf.cm (2 Lb-in / 0.23N.m)

6.Screw thread: M2

7.Stripping length: 6-7mm

8.Operating temperature range:-40°C ~ 115C°C

9.Undimensioned Tolerances:

Dim.L=Px3.81+0.3
Dim.B=(P-1)x3.81
P= number of poles

| | Dim B | Dim L |
|---|---|---|
| 0-30mm | ±0.15 | ±0.20 |
| over 30mm-60mm | ±0.20 | ±0.25 |
| over 60mm-90mm | ±0.25 | ±0.30 |
| over 90mm | ±0.30 | ±0.40 |

10.Safety approval:

11.RoHS Compliance

Part No.: OSTTSXX315D

No. of Poles
02 2 Poles
03 3 Poles
... ...
24 24 Poles

Nonstandard colors
Mins could apply

COLOR
0: Black
2: Red
3: Orange
4: Yellow
5: Green (Standard)
6: Blue
8: Grey

| ITEM | NAME OF PART | MATERIAL | NOTES | Q"TY |
|---|---|---|---|---|
| 6 | FLANGE SCREW | STEEL | M2.5×0.45, Zn Plated | 2 |
| 5 | CAGE | BRASS | M2.0×0.4, Ni PLATED | P |
| 4 | SCREW | STEEL | M2.0×0.4, Zn Plated | P |
| 3 | WIRE GUARD | BRONZE (PhBz) | TIN PLATED | P |
| 2 | COVER | PA66 UL94V-0 | ALL COLOR | 1 |
| 1 | BODY | PA66 UL94V-0 | ALL COLOR | 1 |

| | | | | | | | | |
|---|---|---|---|---|---|---|---|---|
| DWG. | WF. Zhang | DATE | 2016.05.28 | UNITS: | MM | SHEET: | 1 OF 1 | Tolerance |
| CHK. | WF. Zhang | DATE | 2016.06.21 | SCALE: | NONE 2.5:1 ( : ) | REV.: A | | X. ±0.50 |
| APP. | | DATE | | TITLE: | OSTTS 3.81 Series W/Flange "-" Slot screw type | | | X.X ±0.30 |
| | | | | | | | | X.XX ±0.10 |
| | | | | PART NO. | OSTTSXX315D | | | X° ±1° |
| | | | | DWG NO. | OSTTSXX315D.dwg | | | |

| SIGN | DESCRIPTION | CHK. | DATE |
|---|---|---|---|
| | | | |

ON-SHORE TECHNOLOGY, INC.