| SIGN | DATE | DESCRIPTION | APPROVER |
|---|---|---|---|
| 1 | 2010.02.06 | Add cULus standard | Jacke |
| 2 | 2010.02.06 | The Wire strip length is changed | Jacke |
| 3 | 2010.03.23 | Add the 2p mark | Jacke |
| | | *THIS IS CAD DRAWING, DO NOT REVISE MANUALLY!!!* | |

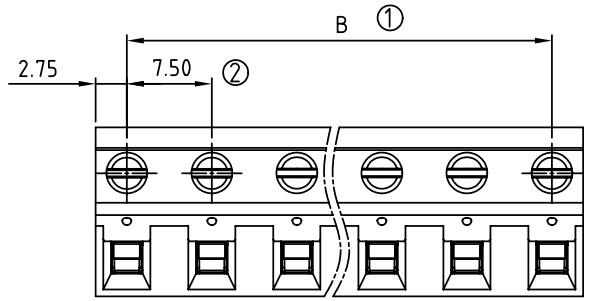


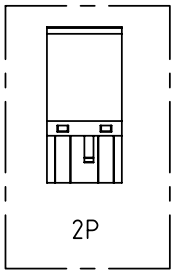


3

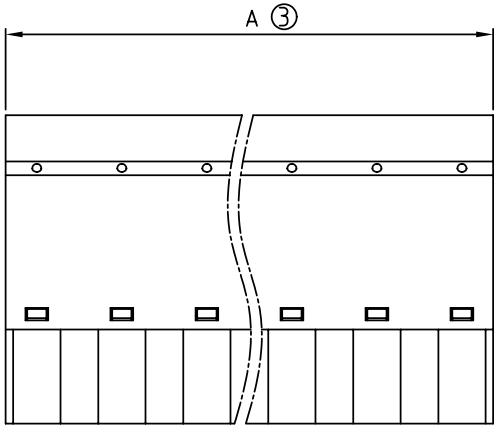


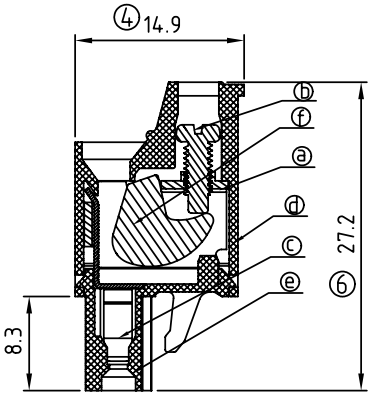


## Material

- Item a Clamp: Steel zinc plated.
- Item b Terminal screw: Brass Zinc plating "-" slot type
- Item c Female contact: PhBz Tin plated
- Item d Terminal (Up body): Thermoplastic (UL94V-0)
- Item e Terminal (Down body): Thermoplastic (UL94V-0)
- Item f Clampcage:Steel Zinc plated

## Electrical cULus

- Voltage rating: 300VAC
- Current rating: 20A
- Wire range: 0.34-2.5mm²
- Solid wire(AWG): 12-22
- Stranded wire(AWG): 12-22
- Torque: 3.5Lb-In
- Screw: M2.5
- 2 Wire strip length: 6-7mm
- Withstanding Voltage: 1.6KV
- Operating temperature: -40°C to +115°C
- 1 Safety approval: c UL us

VM xx A 5 x 1 xxxx G

POLES
02: 02 pole
,,, ,,,
16: 16 pole

Color
0 Black (RAL9005)
2 Red (RAL3001/D)
3 Orange(RAL2011/P)
4 Yellow(RAL1018/A)
5 Green(RAL6018/T)
6 Blue (RAL5015/A)
8 Grey(RAL7035/D)

0000: "@" Logo (Standard)
(Steel screw plating $Cr^{3+}$)
000A: "ANYTEK" Mark
Any special item by customer requst. please contact sales department.

G: Pb<40000ppm

| POLE | | 2 | 3 | 4 | 5 | 6 | 7 | 8 |
|---|---|---|---|---|---|---|---|---|
| A | | 13.00 | 20.50 | 28.00 | 35.50 | 43.00 | 50.50 | 58.00 |
| B | | 7.50 | 15.00 | 22.50 | 30.00 | 37.50 | 45.00 | 52.50 |
| Tol. | ±0.10 | | | | ±0.20 | | | |
| POLE | 9 | 10 | 11 | 12 | 13 | 14 | 15 | 16 |
| A | 65.50 | 73.00 | 80.50 | 88.00 | 95.50 | 103.00 | 110.50 | 118.00 |
| B | 60.00 | 67.50 | 75.00 | 82.50 | 90.00 | 97.50 | 105.00 | 112.50 |
| Tol. | ±0.30 | | | | ±0.40 | | | |

**ANYTEK**

**CUSTOMER COPY**

ALL RIGHTS RESERVED. REPRODUCTION OR ISSUE TO THIRD PARTIES IN ANY FORM WHATEVER IS NOT PERMITTED WITHOUT WRITTEN AUTHORITY FROM THE PROPRIETOR. PROPERTY OF ANYTEK TECHNOLOGY CO., LTD

| | | | | | | |
|---|---|---|---|---|---|---|
| TITLE | VM 7.5 mm W/O Flange Series | | | | | |
| PART NO. | VMxxA5x1xxxxG | | | DWG NO. | 8VM0402 | |
| APPROVED | CHECKED | DESIGNED | DRAWN | CUST NO. | | Tolerance |
| | | Jacke 2010.03.23 | Jacke 2009.10.10 | | UNIT: mm | X. ±0.50 |
| | | | | | SCALE: NONE | X.X ±0.30 |
| | | | | SHEET: 01/01 | REV.: D | X.XX ±0.10 |
| | | | | | | X° ±1° |