RoHS Compliant 4

REV	SIGN	DATE	DESCRIPTION	APPROVER
B	1	11/08'05	Wire guard structure Modified	Tony
	2	02/07'06	Part No. changed	Tony
C	3	2010.03.23	Add the 2p mark	Jacke
D	4	2019.06.20	Add the RoHS compliant&Amphenol Logo.	PansLee
	5	2019.06.20	Add the VDE Electrical parameters	PansLee
	6	2019.06.20	The Wire strip length is change from 6-7mm to 8-9mm	PansLee
	7	2019.06.20	Add the Critical dimension	PansLee

THIS IS CAD DRAWING, DO NOT REVISE MANUALLY!!!

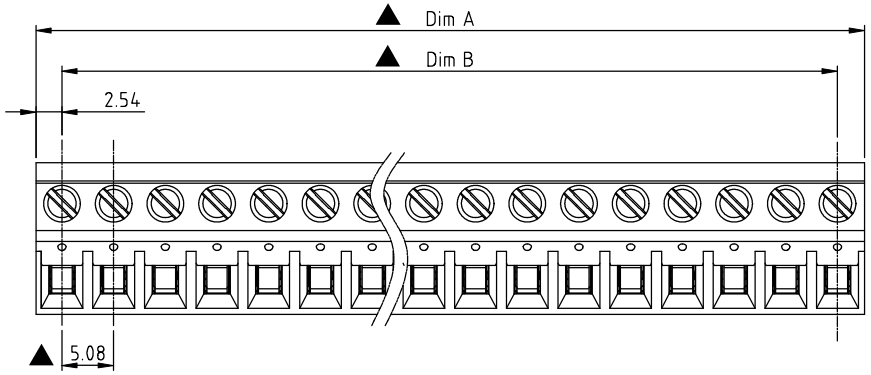

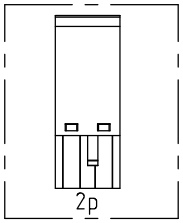

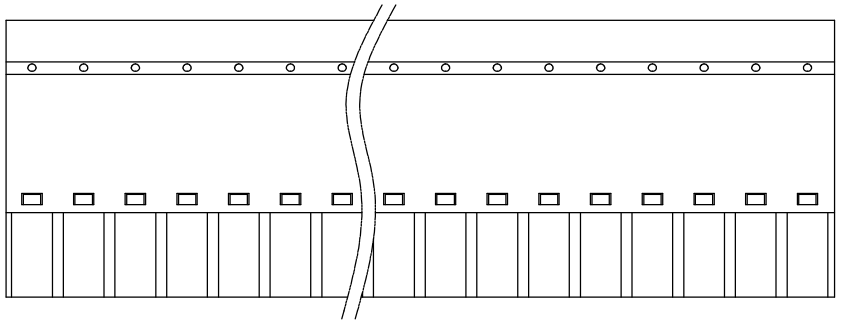

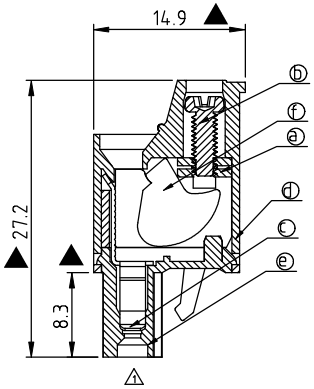

Material

- Item ⓐ Clamp: Steel zinc plated.
- Item ⓑ Terminal screw: Steel Zinc plating "-" slot type
- Item ⓒ Female contact: PhBz Bright Tin plated over Nickel plated
- Item ⓓ Terminal (Up body): Thermoplastic (UL94V-0)
- Item ⓔ Terminal (Down body): Thermoplastic (UL94V-0)
- Item ⓕ Clampcage:Steel Zinc plated

Electrical cULus / VDE 5

- Voltage rating: 300VAC / 300VAC
- Current rating: 20A / 20A
- Wire range: 0.34-2.5mm²
- Solid wire(AWG): 12-22
- Stranded wire(AWG): 12-22
- Torque: 3.5Lb-In / 0.4N.m
- Screw: M2.5
- 6 Wire strip length: 8-9mm
- Withstanding Voltage: 1.6KV / 2.5KV
- Operating temperature: -40°C to +115°C
- Safety approval: cULus VDE 5
- 7 Critical dimension: ▲
- 2 Part No.: VM xx 5 5 x 1 xxxx G

No. OF POLES
02: 2 POLES
:
:
24: 24 POLES

COLOR
0 Black (RAL9005)
2 Red (RAL3001/D)
3 Orange(RAL2011/P)
4 Yellow(RAL1018/A)
5 Green(RAL6018/T)
6 Blue (RAL5015/A)
8 Grey(RAL7035/D)
9 White(RAL1102)
C Green(RAL6018/U)

0000: Standard
(Steel screw plating Cr)
000A: "ANYTEK" Mark
Any special item by customer requst. please contact sales department.

G RoHS compliant (lead<4%) In copper Alloy

POLE		2	3	4	5	6	7	8	9	10	11	12
Dim A		10.16	15.24	20.32	25.40	30.48	35.56	40.64	45.72	50.80	55.88	60.96
Dim B		5.08	10.16	15.24	20.32	25.40	30.48	35.56	40.64	45.72	50.80	55.88
Tol.			±0.20						±0.25			
POLE	13	14	15	16	17	18	19	20	21	22	23	24
Dim A	66.04	71.12	76.20	81.28	86.36	91.44	96.52	101.60	106.68	111.76	116.84	121.92
Dim B	60.96	66.04	71.12	76.20	81.28	86.36	91.44	96.52	101.60	106.68	111.76	116.84
Tol.			±0.30						±0.40			

4

Amphenol ANYTEK

CUSTOMER COPY

ALL RIGHTS RESERVED. REPRODUCTION OR ISSUE TO THIRD PARTIES IN ANY FORM WHATEVER IS NOT PERMITTED WITHOUT WRITTEN AUTHORITY FROM THE PROPRIETOR. PROPERTY OF ANYTEK TECHNOLOGY CO., LTD

TITLE	VM 5.08mm Low Profile Type W/O Flange Series				
PART NO.	VMxx55x1xxxxG			DWG NO.	8VM0302
APPROVED	CHECKED	DESIGNED	DRAWN	CUST NO.	
		PansLee 2019.06.20	PansLee 2019.06.20	UNIT: mm	
				SCALE: NONE	
				SHEET: 01/01	REV.: D

Tolerance	
X.	±0.50
X.X	±0.30
X.XX	±0.10
X°	±1°