CUI INC
a bel group

SERIES: VHB150R | **DESCRIPTION:** DC-DC CONVERTER

FEATURES

- up to 150 W isolated output
- industry standard half brick package
- 3:1 input range (66~160 Vdc)
- single output from 5~24 Vdc
- 2,250 Vdc isolation
- over current, over temperature, over voltage, and short circuit protections
- remote on/off
- efficiency up to 92.5%

MODEL	input voltage range (Vdc)	output voltage (Vdc)	output current max (A)	output power max (W)	ripple and noise[1] max (mVp-p)	efficiency typ (%)
VHB150R-T110-S5	66 ~ 160	5	30	150	100	92.5
VHB150R-T110-S12	66 ~ 160	12	12.5	150	150	92.5
VHB150R-T110-S24	66 ~ 160	24	6.5	156	240	92

Notes: 1. ripple and noise are measured at 20 MHz BW with 10μF tantalum capacitor and 1μF ceramic capacitor across output
2. an external input capacitor of 120 μF is recommended to reduce the input ripple voltage.

PART NUMBER KEY

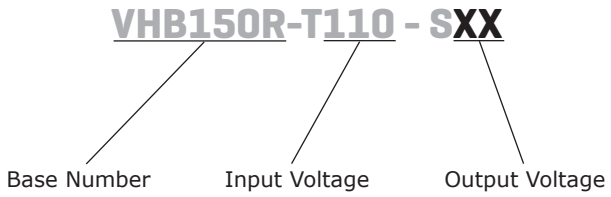

INPUT

parameter	conditions/description	min	typ	max	units
operating input voltage		66	110	160	Vdc
input surge voltage	100 ms max.			180	Vdc
under voltage lockout	power up power down		62 56		Vdc Vdc
start-up time			45		ms
filter	PI type				
on/off[1]	models ON (open circuit or 3.5~75 Vdc)				
	models OFF (0~1.8 Vdc)				

Notes: 1. logic compatibility, open collector reference to –input.

OUTPUT

parameter	conditions/description	min	typ	max	units
output capacitance	5 Vdc output model 12 Vdc output model 24 Vdc output model			10,000 5,600 2,200	µF µF µF
line regulation	measured from high line to low line			±0.2	%
load regulation	measured from full load to zero load			±0.2	%
voltage accuracy				±1.5	%
adjustability	see application notes		±10		%
switching frequency	100% load, input voltage range		200		kHz
transient response	25% step load change — error band recover time			±5 200	% Vout µs
temperature coefficient			±0.03		%/°C

PROTECTIONS

parameter	conditions/description	min	typ	max	units
over voltage protection	%Vo	115		140	%
over current protection	% nominal output current	110		180	%
short circuit protection	continuous				
over temperature protection			105		°C

SAFETY AND COMPLIANCE

parameter	conditions/description	min	typ	max	units
isolation voltage	input to output input to case output to case	2,250 2,250 1,500			Vdc Vdc Vdc
isolation resistance		10			MΩ
isolation capacitance			1,000		pF
safety approvals	UL 60950-1				
EMC	EN50155 (EN50121-3-2) (external circuit required, see Figure 1)				
EMI	EN55011 Class A				
ESD	EN61000-4-2 Air ±8 kV Class B				
	EN61000-4-2 Contact ±6 kV Class A				
radiated immunity	EN61000-4-3 10 V/m Class A				
EFT/burst	EN61000-4-4 ±2 kV Class A				
surge	EN61000-4-5 ±1 kV Class B				
conducted immunity	EN61000-4-6 10 Vr.m.s Class A				
RoHS compliant	2011/65/EU				

ENVIRONMENTAL

parameter	conditions/description	min	typ	max	units
operating case temperature		-40		100	°C
storage temperature		-55		105	°C
humidity	non-condensing			95	%
stock/vibration	EN50155(EN61373)				
enviromental	EN50155(EN60068-2-1, EN60068-2-2, EN60068-2-30)				

SOLDERABILITY

parameter	conditions/description	min	typ	max	units
wave soldering	see wave soldering profile			260	°C

Notes:
1. Soldering materials: Sn/Cu/Ni
2. Ramp up rate during preheat: 1.4°C/s (from 50°C to 100°C)
3. Soaking temperature: 0.5°C/s (from 100°C to 130°C), 60±20 seconds
4. Peak temperature: 260°C, above 250°C for 3~6 seconds
5. Ramp down rate during cooling: -10°C/s (from 260°C to 150°C)

WAVE SOLDERING PROFILE

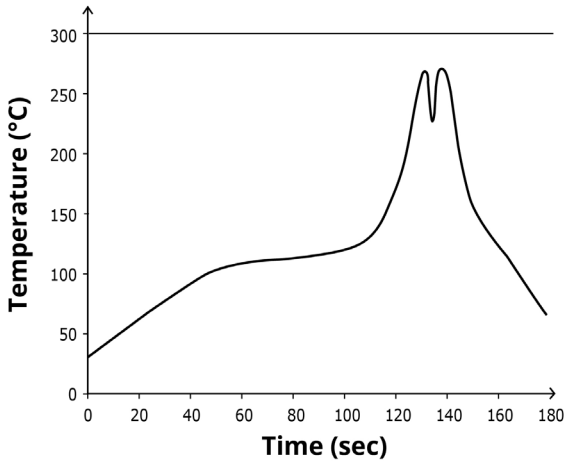

MECHANICAL

parameter	conditions/description	min	typ	max	units
dimensions	2.28 x 2.40 x 0.5 (57.9 x 61.0 x 12.7 mm)				inch
case material	aluminum baseplate with plastic case				
weight			90		g

MECHANICAL DRAWING

units: inches [mm]
tolerance: x.xx ± 0.02" [±0.5mm]
x.xxx ± 0.010" [±0.25mm]

PIN CONNECTIONS	
PIN	FUNCTION
1	+Vin
2	On/Off
3	CASE
4	-Vin
5	-Vo
6	-S
7	TRIM
8	+S
9	+Vo

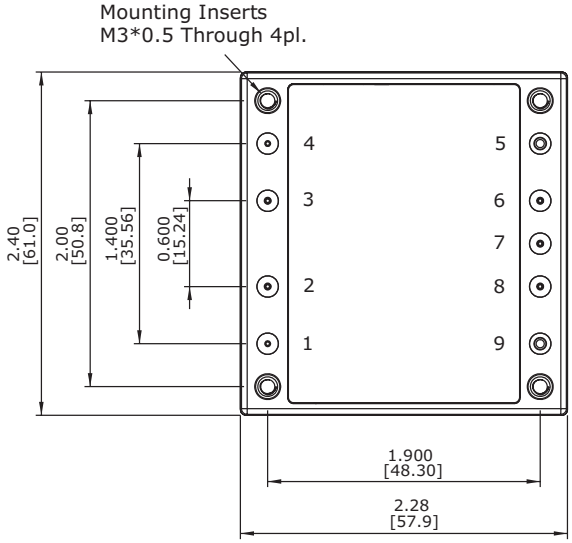

BOTTOM VIEW

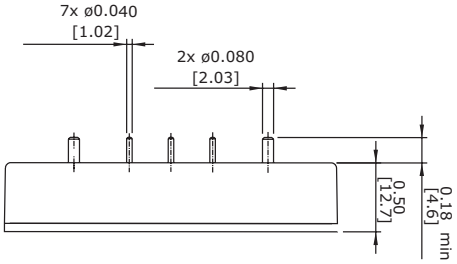

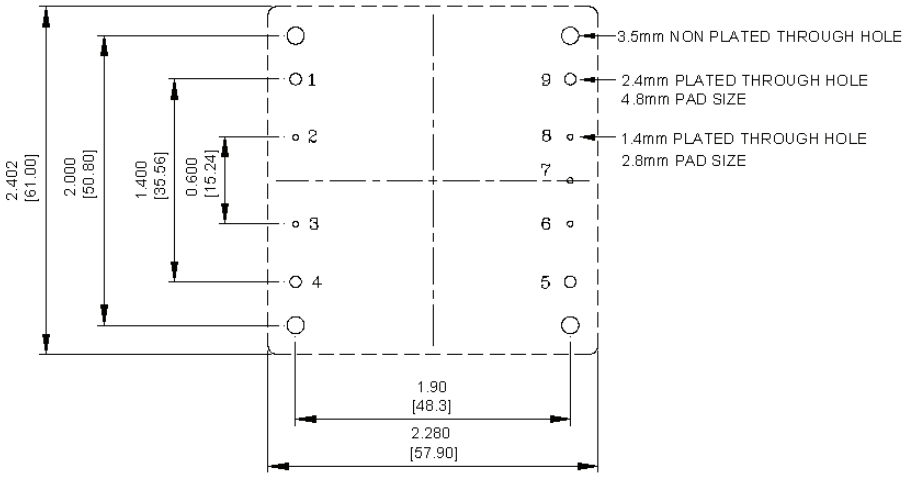

PCB LAYOUT
TOP VIEW

EMC RECOMMENDED CIRCUITS

EN50155 (EN50121-3-2) (EN55011 Class A)

Figure 1
Recommended Circuit for EN50155 (EN50121-3-2) (EN55011 Class A)

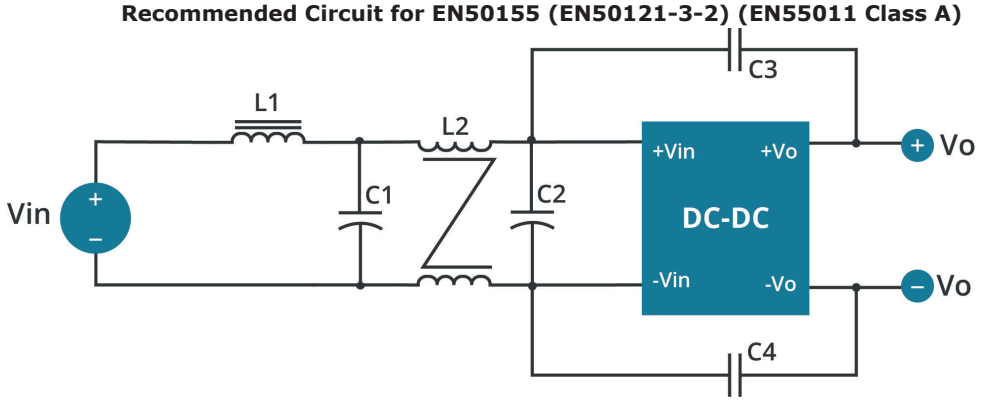

Table 1

Recommended External Circuit Components							
Model	D1	C1	C2	C3	C4	L1	L2
VHB150R-T110-S5	1.5KE180A Littelfuse	220uF/200V YXF	220uF/200V YXF	2200 pF	2200 pF	5 µH	0.33 mH
VHB150R-T110-S12	1.5KE180A Littelfuse	220uF/200V YXF	220uF/200V YXF	2200 pF	2200 pF	5 µH	0.33 mH
VHB150R-T110-S24	1.5KE180A Littelfuse	220uF/200V YXF	220uF/200V YXF	2200 pF	2200 pF	5 µH	0.33 mH

Note: C1, C2 Aluminum Capacitors and C3, C4 Ceramic Capacitors

EN55022 Class B

Figure 2
Recommended Circuit for EN55022 Class B

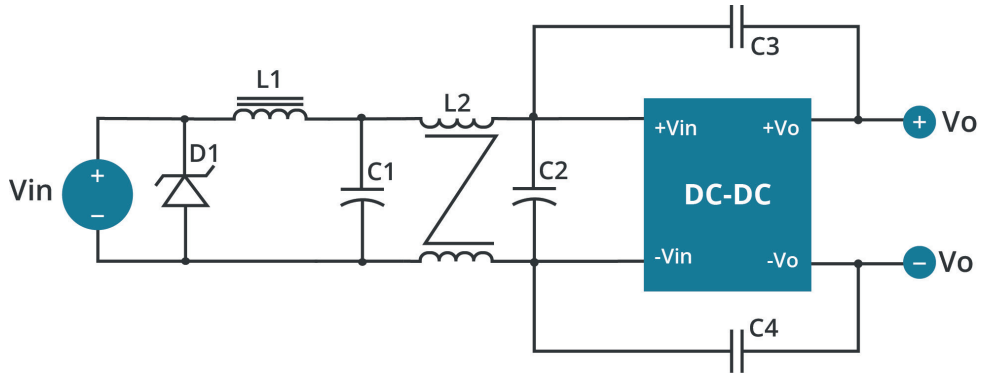

Table 2

Recommended External Circuit Components						
Model	C1	C2	C3	C4	L1	L2
VHB150R-T110-S5	220 µF/200 V YXF	220 µF/200 V YXF	2200 pF	2200 pF	5 µH	0.33 mH
VHB150R-T110-S12	220 µF/200 V YXF	220 µF/200 V YXF	2200 pF	2200 pF	5 µH	0.33 mH
VHB150R-T110-S24	220 µF/200 V YXF	220 µF/200 V YXF	2200 pF	2200 pF	5 µH	0.33 mH

Note: C1, C2 Aluminum Capacitors and C3, C4 Ceramic Capacitors

APPLICATION NOTES

1. **Output Voltage Trimming**
   Leave open if not used.

Figure 3

Trim up

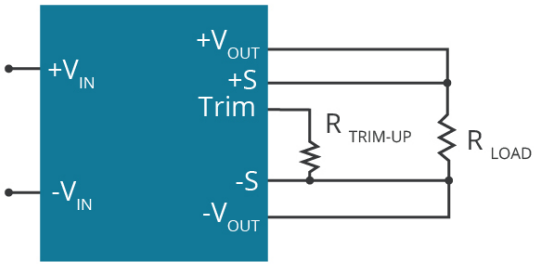

Trim down

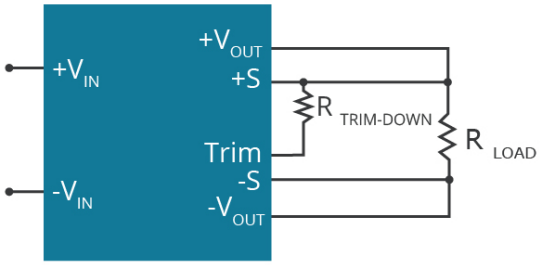

$$R_{TRIM} = \left(\frac{R_{TOP}\,(V_{REF} - V_F\,(\frac{R_{BOTTOM}}{R_{BOTTOM} + R_O}))}{V_{OUT} - V_{OUT,\,NOM}} \right) - \frac{R_{BOTTOM} R_O}{R_{BOTTOM} + R_O} \quad (K\,\Omega)$$

Formula for Trim up

$$R_{TRIM} = \frac{R_{TOP}\,(V_{OUT} - V_{REF})}{V_{OUT,\,NOM} - V_{OUT}} - R_{BOTTOM} \quad (K\,\Omega)$$

Formula for Trim down

Table 3

V_{NOM}	R_{TOP}	R_{BOTTOM}	R_O	V_{REF}	V_F
(Vdc)	(kΩ)	(kΩ)	(kΩ)	(V)	(V)
5	2.32	3.3	0	2.5	0
12	9.1	51	5.1	2.5	0.46
24	20	100	7.5	2.5	0.46

Note: Value for R_{TOP}, R_{BOTTOM}, R_O, V_{REF} ,and V_F refer to Table 3 (fixed internal values).
R_{TRIM}: Trim resistance
a: User-defined parameter, no actual meanings
V_{NOM}: Nominal output voltage
V_{OUT}: Target output voltage

Note: All specifications measured at 25°C, nominal input voltage, and full load unless otherwise noted.

REVISION HISTORY

rev.	description	date
1.0	initial release	06/20/2012
1.01	misc. updates, added product photo	11/13/2012
1.02	updated input voltage range	01/29/2013
1.03	updated spec	03/14/2013
1.04	updated features section	05/30/2013
1.05	added EMC recommendations	06/18/2015
1.06	company logo updated	02/09/2021
1.07	circuit figures updated	09/07/2021
1.08	output voltage trimming updated	05/29/2023

The revision history provided is for informational purposes only and is believed to be accurate.

CUI INC
a bel group

Headquarters
20050 SW 112th Ave.
Tualatin, OR 97062
800.275.4899

Fax 503.612.2383
cui.com
techsupport@cui.com

CUI offers a two (2) year limited warranty. Complete warranty information is listed on our website.

CUI reserves the right to make changes to the product at any time without notice. Information provided by CUI is believed to be accurate and reliable. However, no responsibility is assumed by CUI for its use, nor for any infringements of patents or other rights of third parties which may result from its use.

CUI products are not authorized or warranted for use as critical components in equipment that requires an extremely high level of reliability. A critical component is any component of a life support device or system whose failure to perform can be reasonably expected to cause the failure of the life support device or system, or to affect its safety or effectiveness.