SIDE VIEW

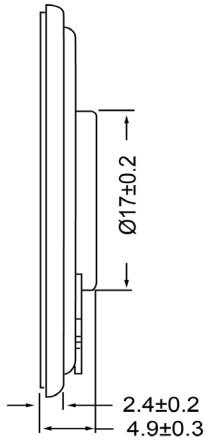

BOTTOM VIEW

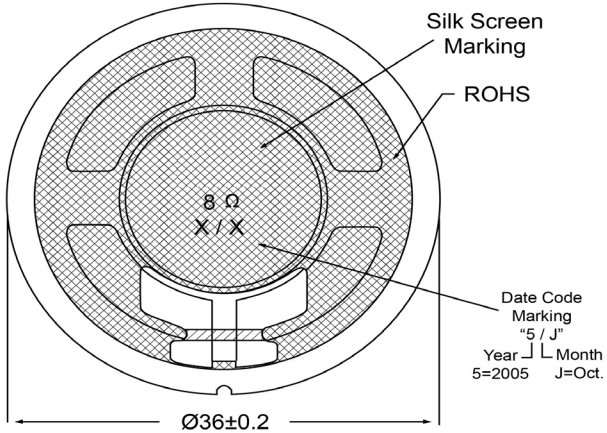

Specifications

Description	Value	Unit
Shape	Round	
Resonant Frequency	500	(Hz)
Frequency Range	500 ~ 10,000	(Hz)
SPL @ 10cm	90	(dBA)
Impedance	8	(Ohm)
Cone Material	Mylar	
Nominal Power	0.5	(W)
Max Power	0.8	(W)
Mount Type	Flush Mount	
Operating Temperature	- 20 ~ + 55	°C
Storage Temperature	- 20 ~ + 55	°C
Weight	8.6	(g)

Notes

1) All dimensions are in mm unless otherwise noted
2) All parts meet RoHS

DB UNLIMITED

Revision History

Version	Description	Date	Approved
1	Released from Engineering	2/5/2014	J.S

Drawn by	Date	Checked by	Date	Approved by	Date
G.W.	10/31/2013	C.E.	10/21/2013	J.S	2/5/2014

Dynamic Speaker

SM360508-1

Additional considerations can be found at www.dbunlimitedco.com/technical-articles.

©2013, DB Unlimited