SIGN	DATE	DESCRIPTION	APPROVER
1	03/29`12	Add is cULus	Chen Bo
2	03/29`12	The dimension is changed from 11.40mm to 11.4mm	Chen Bo
3	03/29`12	The dimension D & E are added	Chen Bo
THIS IS CAD DRAWING, DO NOT REVISE MANUALLY!!!			

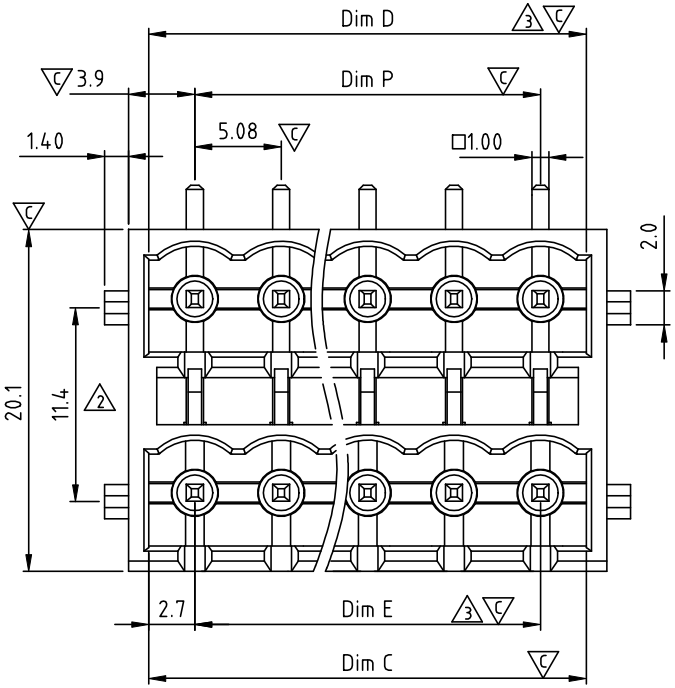

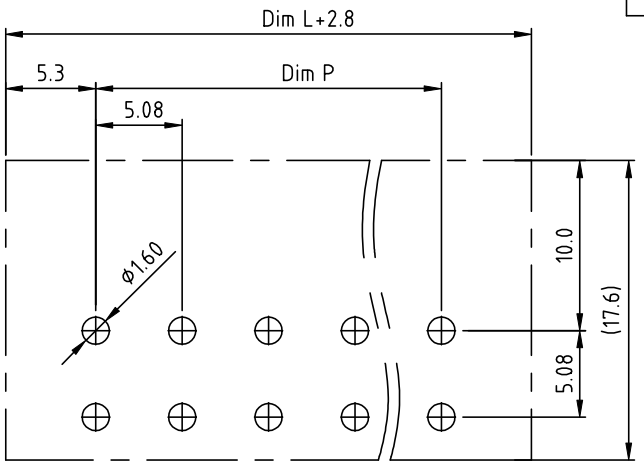

PCB Layout

Material:
- Item a Terminal(housing): Thermoplastic (UL94V-0)
- Item b Terminal(cover): Thermoplastic (UL94V-0)
- Item c Male contact pin of short: Copper Tin plated
- Item d Male contact pin of long: Copper Tin plated

Electrical:	cULus
Voltage rating:	300V
Current rating:	12A
Withstanding Voltage:	1.6KV
Operating temperature:	-40°C to +115°C
Soldering temperature:	250°C ±10°C/5 Sec
1 Safety Approval:	c UL us
Critical dimension:	C

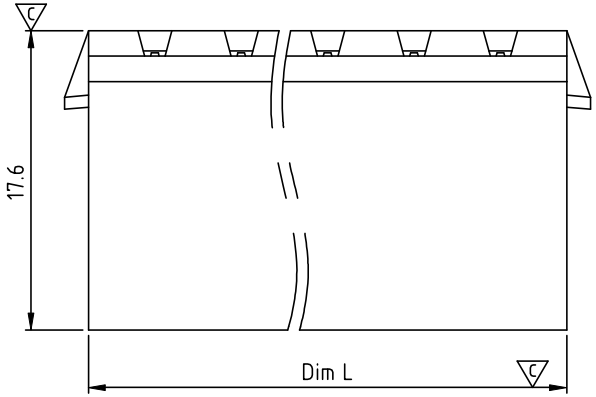

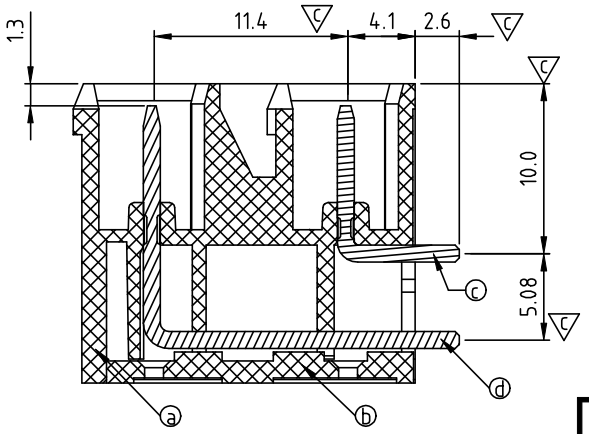

KE xx 5 3 x 3 xxxx G

No. OF POLES
04: 2×2 POLES
06: 2×3 POLES
48: 2×24 POLES

G RoHS compliant (lead<4%) In copper Alloy

COLOR
0000: "@" Logo (Standard)
000A: "ANYTEK" Mark
Any special item by customer requst. please contact sales department.

0	Black (RAL9005)
2	Red (RAL3001/D)
3	Orange(RAL2011/P)
4	Yellow(RAL1018/A)
5	Green(RAL6018/T)
6	Blue (RAL5015/A)
8	Grey(RAL7035/D)
9	White(RAL1102)
C	Green(RAL6018/U)

Poles	Dim L	Dim P	Dim C	Dim D	Dim E
2×2-2×6p	±0.15	±0.15	+0.05 −0.05	+0.05 −0.05	±0.15
2×7-2×12p	±0.25	±0.25	+0.10 −0.05	+0.10 −0.05	±0.25
2×13-2×18p	±0.35	±0.35	+0.20 −0.05	+0.20 −0.05	±0.35
2×19-2×24p	±0.40	±0.40	+0.25 −0.10	+0.25 −0.10	±0.40

N = Number of poles
Dim L=N×5.08+2.72
Dim P=(N-1)x5.08
Dim C=(N-1)x5.08+5.4
Dim D=(N-1)x5.08+5.4
Dim E=(N-1)x5.08

ANYTEK

CUSTOMER COPY

ALL RIGHTS RESERVED. REPRODUCTION OR ISSUE TO THIRD PARTIES IN ANY FORM WHATEVER IS NOT PERMITTED WITHOUT WRITTEN AUTHORITY FROM THE PROPRIETOR. PROPERTY OF ANYTEK TECHNOLOGY CO., LTD

TITLE	KE 5.08mm With latch holder Series (Right angle) DIP TYPE					
PART NO.	KExx53x3xxxxG			DWG NO.	8KE0211	
APPROVED	CHECKED	DESIGNED	DRAWN	CUST NO.		Tolerance
		Chen Bo 03/29`12	Chen Bo 03/29`12		UNIT: mm	X. ±0.50
					SCALE: NONE	X.X ±0.30
				SHEET: 01/01	REV.: C	X.XX ±0.10
						X° ±1°