PEC KA/KU/RV4NAY Series

Potentiometer – 2 Watt, 1/4” dia. shaft

Features

- **Hot molded carbon element**
- **Gold plated terminals**
- **Stainless steel shaft and housing**
- **Available in Linear (KU) and Logarithmic (KA) taper**
- **Meets or exceeds specifications of MIL–R–94 — QPL Listed**

	PEC No.	NTE Part No.	Military No.	Value (Ohms)	Shaft Length	Diag No.
	KU5001S28	501–0001	RV4NAYSD500A	50	7/8”	P1
	KU1011S28	501–0002	RV4NAYSD101A	100	7/8”	P1
	KU1511S28	501–0048	RV4NAYSD151A	150	7/8”	P1
NEW	KU2011S28	501–0051	RV4NAYSD201A	200	7/8”	P1
	KU2511S28	501–0003	RV4NAYSD251A	250	7/8”	P1
	KU5011S28	501–0004	RV4NAYSD501A	500	7/8”	P1
	KU1021S28	501–0005	RV4NAYSD102A	1K	7/8”	P1
	KU2021S28	501–0006	RV4NAYSD202A	2K	7/8”	P1
	KU2521S28	501–0007	RV4NAYSD252A	2.5K	7/8”	P1
	KU3521S28	501–0008	RV4NAYSD352A	3.5K	7/8”	P1
	KU5021S28	501–0009	RV4NAYSD502A	5K	7/8”	P1
	KU1031S28	501–0010	RV4NAYSD103A	10K	7/8:	P1
NEW	KA1031S28	501–0021**	RV4NAYSD103C	10K	7/8”	P1
	KU2031S28	501–0011	RV4NAYSD203A	20K	7/8”	P1
	KU2531S28	501–0012	RV4NAYSD253A	25K	7/8”	P1
NEW	KA2531S28	501–0022**	RV4NAYSD253C	25K	7/8”	P1
	KU3531S28	501–0013	RV4NAYSD353A	35K	7/8”	P1
	KU5031S28	501–0014	RV4NAYSD503A	50K	7/8”	P1
	KU1041S28	501–0015	RV4NAYSD104A	100K	7/8”	P1
NEW	KA1041S28	501–0023**	RV4NAYSD104C	100K	7/8”	P1
	KU1541S28	501–0049	RV4NAYSD154A	150K	7/8”	P1
	KU2041S28	501–0016	RV4NAYSD204A	200K	7/8”	P1
	KU2541S28	501–0017	RV4NAYSD254A	250K	7/8”	P1
NEW	KA2541S28	501–0024**	RV4NAYSD254C	250K	7/8”	P1
	KU5041S28	501–0018	RV4NAYSD504A	500K	7/8”	P1
NEW	KA5041S28	501–0025**	RV4NAYSD504C	500K	7/8”	P1
	KU1051S28	501–0019	RV4NAYSD105A	1M	7/8”	P1
NEW	KA1051S28	501–0026**	RV4NAYSD105C	1M	7/8”	P1
	KU5051S28	501–0020	RV4NAYSD505B	5M	7/8”	P1
	KU5001S64	501–0030	RV4NAYSJ500A	50	2”	P2
	KU1011S64	501–0031	RV4NAYSJ101A	100	2”	P2
	KU2511S64	501–0032	RV4NAYSJ251A	250	2”	P2
	KU5011S64	501–0033	RV4NAYSJ501A	500	2”	P2
	KU1021S64	501–0034	RV4NAYSJ102A	1K	2”	P2
	KU2021S64	501–0035	RV4NAYSJ202A	2K	2”	P2
	KU2521S64	501–0036	RV4NAYSJ252A	2.5K	2”	P2
	KU3521S64	501–0037	RV4NAYSJ352A	3.5K	2”	P2
	KU5021S64	501–0038	RV4NAYSJ502A	5K	2”	P2
	KU1031S64	501–0039	RV4NAYSJ103A	10K	2”	P2
	KU2031S64	501–0040	RV4NAYSJ203A	20K	2”	P2
	KU2531S64	501–0041	RV4NAYSJ253A	25K	2”	P2
	KU5031S64	501–0042	RV4NAYSJ503A	50K	2”	P2
	KU1041S64	501–0043	RV4NAYSJ104A	100K	2”	P2
	KU2041S64	501–0044	RV4NAYSJ204A	200K	2”	P2
	KU2541S64	501–0045	RV4NAYSJ254A	250K	2”	P2
	KU5041S64	501–0046	RV4NAYSJ504A	500K	2”	P2
	KU1051S64	501–0047	RV4NAYSJ105A	1M	2”	P2

** Indicates logarithmic taper.

P1

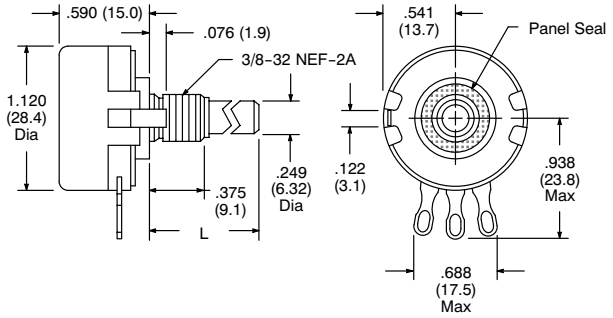

P2

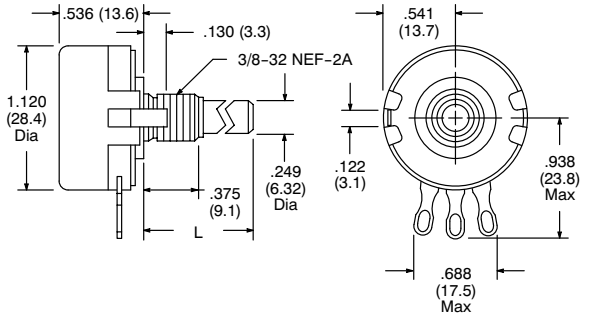

L = Shaft Length (See Table)

Specifications

Electrical

Resistance Range – Linear Taper (KU): 50Ω to 1 Meg Ω
– Logarithmic Taper (KA): 10KΩ to 1 Meg Ω
Resistance Tolerance: ±10%
Power Rating: 2 Watts @ 70°C derated to 0 Watts @ 120°C
Insulation Resistance: 10K Meg Ω (Dry)
100K Meg Ω (Wet)
Dielectric Strength: 900V RMS at sea level
Operating Voltage: 500V subject to power rating

Mechanical

Mechanical Rotation: 314°
Operating Torque: 1 oz/in to 6 oz/in
Rotation Life: 25,000 cycles

Environmental

Operating Temperature: –65°C to +125°C
Resistance to Soldering Heat: 350°C for 5 seconds
Load Life: 1000 hr. at 70°C