REV.	LOCAS.	DESCRIPTION	DATE	DRAWN
01	NEW	BATCH PRODUCTION INITIAL RELEASE.	2022.07.28	賴昌僥

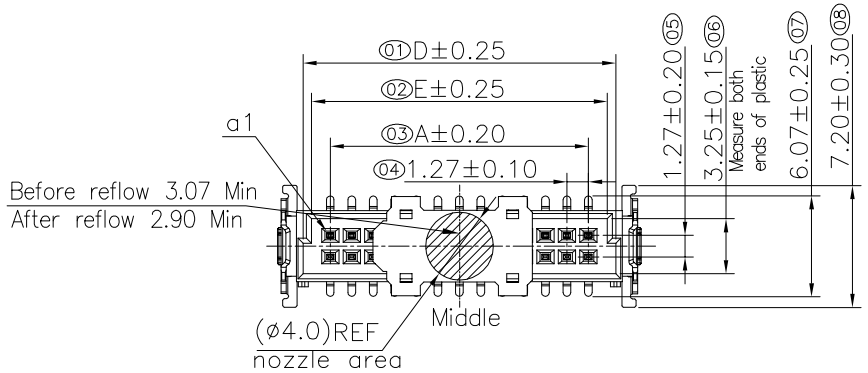

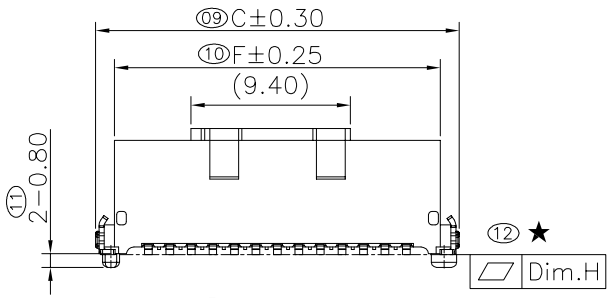

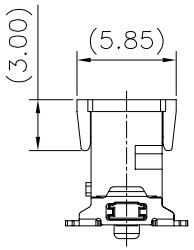

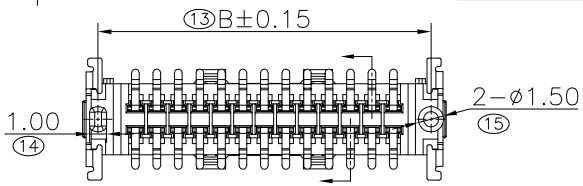

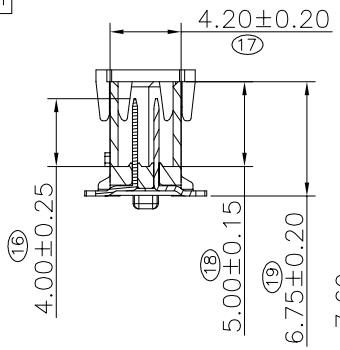

Specifications
Current Rating:1.7Amp/Pin.
Insulation Resistance:10000MΩ Min.
Dielectric Withstanding Voltage:500VAC
Contact Resistance:25mΩ Max.
Operating Temperature:−55°C to +125°C
Materials
Contact Material:Phosphor Bronze
Insulator Material:High Temperature Thermoplastic, UL 94V−0 LCP or the equivalent material Colour:Black
☆ All materials must meet Greenconn requirement for environment protection.
"★": Critical Characteristics.
indicates product characteristics, functionalities, and manufacturing processes regarding to customer's specifications
"☆": Safety Features
indicates product characteristics, functionalities, and manufacturing processes complying to legal regulations stated by local government

Pin No.	Dim.H
≤25Pin	0.12
>25Pin	0.15

No. of PIN/ROW	Dimension Information					
	A	B	C	D	E	F
2x05	5.08	9.50	11.30	8.30	7.30	9.08
2x06	6.35	10.77	12.57	9.57	8.57	10.35
2x08	8.89	13.31	15.11	12.11	11.11	12.89
2x10	11.43	15.85	17.65	14.65	13.65	15.43
2x13	15.24	19.66	21.46	18.46	17.46	19.24
2x16	19.05	23.47	25.27	22.27	21.27	23.05
2x20	24.13	28.55	30.35	27.35	26.35	28.13
2x25	30.48	34.90	36.70	33.70	32.70	34.48
2x34	41.91	46.33	48.13	45.13	44.13	45.91
2x40	49.53	53.95	55.75	52.75	51.75	53.53

Ordering Information

G BEC209 − XX XX B 001 C 1 A X

No. of Pins per Row
05,06,08,10,13,16,20,25,34,40

Standard Plating
05=1u"Au/80~160u"Matte Tin
79=5u"Au/80~160u"Matte Tin

Standard Packing
C=Tube
E=CAP+Tube
Selective Packing
F=CAP+Tape&Reel

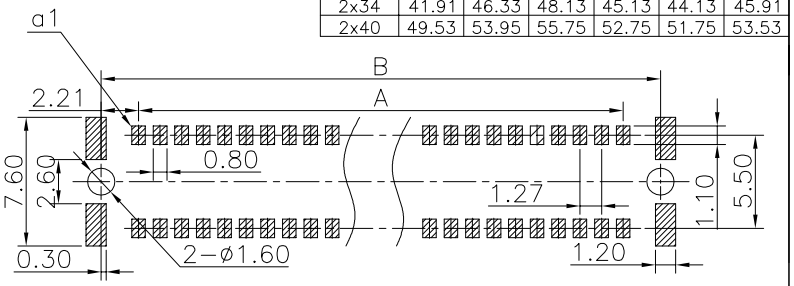

Recommended P.C.Board Layout
(Tolerance:±0.05)

Greenconn
Website:www.greenconn.com
E−mail:sales@greenconn.com

REV.	UNIT.	SCALE.	3RD.ANG PROJ.	PAGE.
01	mm	5:2		1/1

GENERAL TOLERANCE	
X.°±5.0°	X.±0.30
.X°±3.0°	.X±0.25
.XX°±2.0°	.XX±0.15
.XXX°±1.0°	.XXX±0.10

DESIGNED: 賴昌僥	DATE: 2022.07.28	DWG. NO. GBEC209−CB001	TITLE. PITCH 1.27 MALE SMC Q TYPE SMT TYPE H6.70mm CONNECTOR
CHECKED:	DATE:	PART NO. GBEC209−XXXXB001C1AX	
APPROVED:	DATE:		