THIS DRAWING IS UNPUBLISHED. RELEASED FOR PUBLICATION -,- .
© COPYRIGHT - By - ALL RIGHTS RESERVED.

LOC	DIST
GP	00

REVISIONS

P	LTR	DESCRIPTION	DATE	DWN	APVD
	L	REVISED PER ECO-15-004948	27APR2015	AP	SB

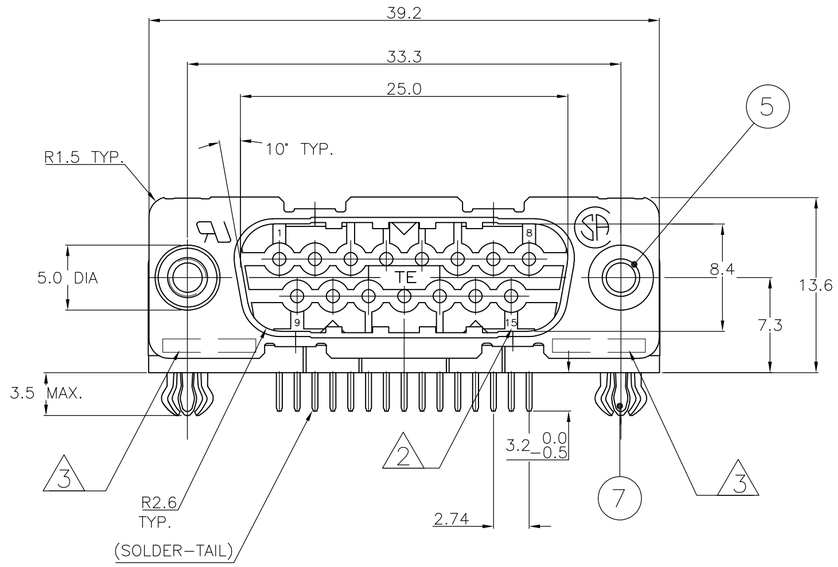

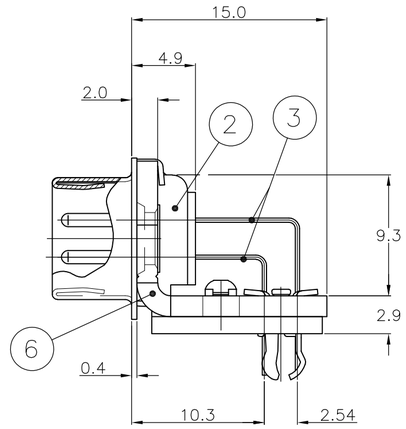

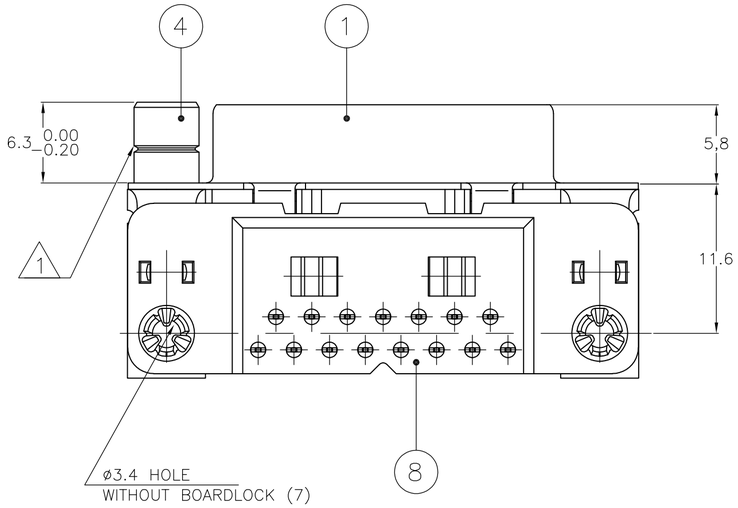

	ITEM NO	DESCRIPTION OF ACCESSORY	338169-2	1-338169-2	2-338169-2	3-338169-2	4-338169-2	5-338169-2	6-338169-2	7-338169-2	8-338169-2	9-338169-2
ACCESSORIES	5	ø3.1 INSERT	2					2				
	5	INSERT WITH INNER THREAD 4-40 UNC		2					2			
	5	INSERT WITH INNER THREAD M3			2					2		
	4	FEMALE SCREWLOCK WITH 4-40 UNC				2					2	
	4	FEMALE SCREWLOCK WITH M3					2					2
	7	BOARDLOCK	2	2	2	2	2					
			OBSOLETE					OBSOLETE			OBSOLETE	

1. GROOVE INDICATES VERSION WITH 4-40 UNC INNER THREAD; WITHOUT GROOVE INDICATES VERSION WITH M3 INNER THREAD.
2. CAVITY IDENTIFICATION AT FRONT SIDE ONLY.
3. PART NUMBER AND DATE CODE.
4. SHELL HAS 2x4 GROUNDING SPRINGS; PITCH IS 3.6.
5. AIR AND CREEPAGE DISTANCES ACCORDING TO DIN 41652.
6. GOLD FLASH OVER PALLADIUM-NICKEL PLATE OR GOLD PLATE ON THE MATING SURFACES, TIN PLATE ON THE SOLDER-TAILS, NICKEL UNDERPLATE ON THE ENTIRE CONTACT. MATING SURFACE FINISH MEETS PERFORMANCE LEVEL 2 PER DIN 41652.

338169

ITEM NO/MATERIAL :

1	SHELL	: BRIGHT TIN PLATED STEEL
2	HOUSING	: GLASS FILLED POLYESTER, COLOR : BLACK
3	CONTACTS	: PHOSPHOR BRONZE (PLATING : SEE NOTES)
4	FEMALE SCREWLOCK	: TIN PLATED STEEL (INNER THREAD 4-40 UNC OR M3)
5	INSERT	: TIN PLATED STEEL (INNER THREAD 4-40 UNC OR M3 OR ø3.1 THRU-HOLE)
6	BRACKET	: TIN PLATED STEEL
7	BOARDLOCK	: TIN PLATED PHOSPHOR BRONZE
8	SOLDER-TAIL ALIGNMENT PLATE	: GLASS FILLED NYLON. COLOR : BLACK

RECOMMENDED P.C. BOARD HOLE-LAYOUT

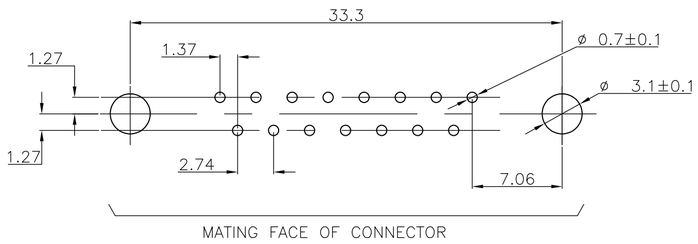

THIS DRAWING IS A CONTROLLED DOCUMENT.
DIMENSIONING AND TOLERANCING PER ASME Y14.5M-2009

DIMENSIONS: mm

TOLERANCES UNLESS OTHERWISE SPECIFIED:
0 PLC ± -
1 PLC ± -
2 PLC ± -
3 PLC ± -
4 PLC ± -
ANGLES ± -

MATERIAL -
FINISH -

DWN D. KESSLER 18JAN99
CHK W.SOOMERS
APVD —
PRODUCT SPEC —
APPLICATION SPEC —
WEIGHT —

TE Connectivity

NAME HD-20 SIZE 2
RIGHT ANGLE PLUG HEADER; MARK II+
—

SIZE	CAGE CODE	DRAWING NO	RESTRICTED TO
A2	00779	C-338169	—

CUSTOMER DRAWING | SCALE NTS | SHEET 1 OF 1 | REV L