THIS DRAWING IS UNPUBLISHED. RELEASED FOR PUBLICATION - ,- .
© COPYRIGHT - By - ALL RIGHTS RESERVED.

LOC	DIST
CM	54

REVISIONS

P	LTR	DESCRIPTION	DATE	DWN	APVD
	Y	REVISED PER ECO-12-016930	050CT12	KH	SM

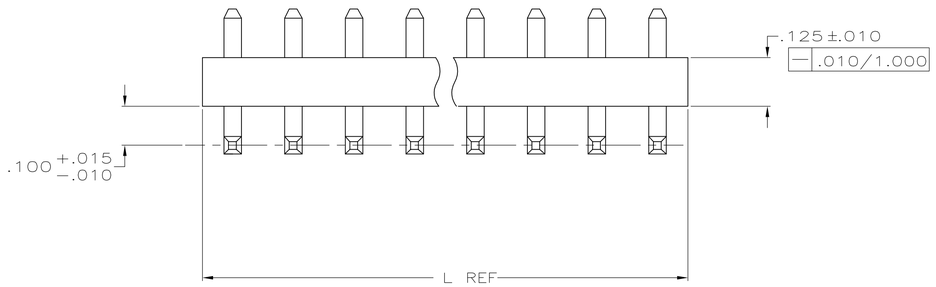

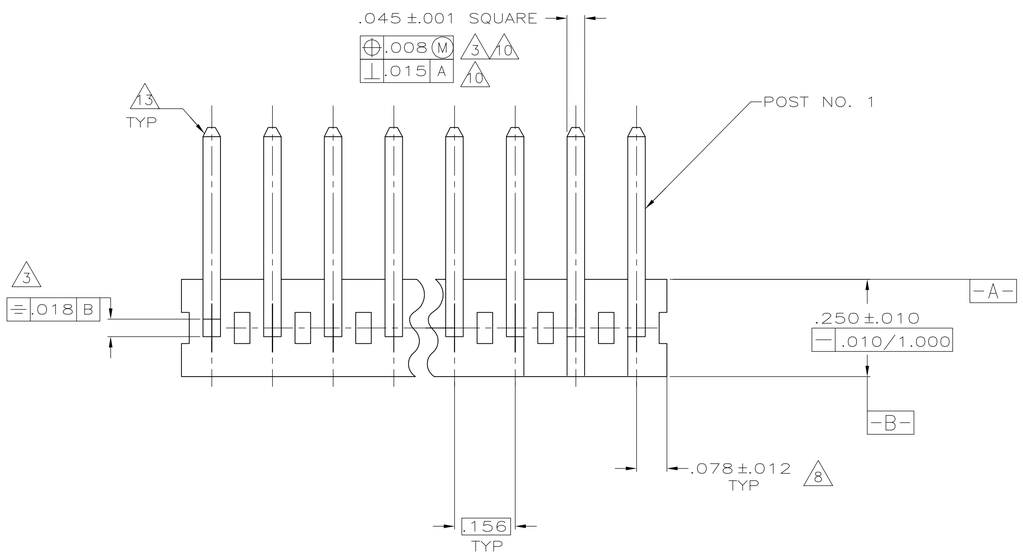

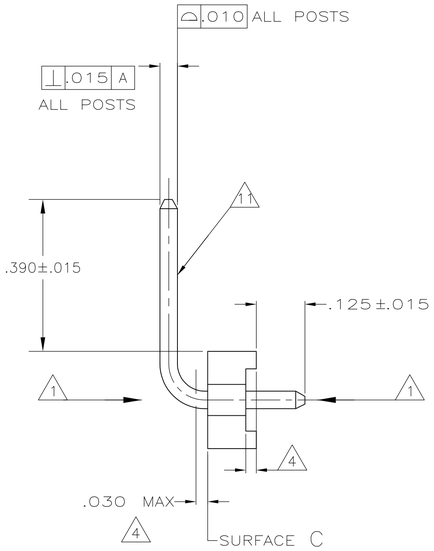

1. POST TO WITHSTAND 13 NEWTONS (3LBS.) MIN. AXIAL FORCE IN BOTH DIRECTIONS SHOWN WITHOUT DISLODGING.
2. TOLERANCES APPLY TO SOLDER SIDE OF BOARD.
3. MEASURED AT SURFACE
4. PLASTIC FLASH PERMITTED IN THIS AREA.
5. PARTS COMPLY WITH AMP SOLDERABILITY SPEC. NO. 109-11-2.
6. ONE HOLE MAY BE UNDERSIZED (.065/.060 DIA.) FOR ASSEMBLY RETENTION DURING WAVE SOLDERING.
7. MATERIAL: HEADER-THERMOPLASTIC POLYESTER GLASS-FILLED 94V-0(NATURAL) POST-COPPER ALLOY (TIN PLATED)
8. COORDINATE DIMENSION APPLIES FROM CENTER OF ACTUAL FEATURE.
9. PLASTIC BURRS CAUSED BY CUT-OFF TOOLING ARE PERMITTED WITHIN THE MAXIMUM TOLERANCE ENVELOPE.
10. POST TO BE MEASURED WHEN STRIP IS HELD FLAT.
11. POST MUST WITHSTAND TWO 90° BENDS AGAINST EXTRUSION WITHOUT BREAKING.
12. DIMENSION SHOULD BE .140 -.430 WHEN MATING WITH A MTA 156 CONNECTOR ASSEMBLY,.140 MIN WHEN MATING WITH A SL 156 WIRE-TO-BOARD CONNECTOR ASSEMBLY OR .140-.475 WHEN MATING WITH A SL 156 BOARD-TO-BOARD CONNECTOR ASSEMBLY.
13. PIN BURR OF .005 MAX. VERTICAL AND .003 MAX. HORIZONTAL PERMITTED AT POST TIPS ON BOTH ENDS.

L IN	L MM	NUMBER OF POSITIONS	PART NUMBER
3.744	95.10	24	2-640385-4
3.588	91.14	23	2-640385-3
3.432	87.17	22	2-640385-2
3.276	83.21	21	2-640385-1
3.120	79.25	20	2-640385-0
2.964	75.29	19	1-640385-9
2.808	71.32	18	1-640385-8
2.652	67.36	17	1-640385-7
2.496	63.40	16	1-640385-6
2.340	59.44	15	1-640385-5
2.184	55.47	14	1-640385-4
2.028	51.51	13	1-640385-3
1.872	47.55	12	1-640385-2
1.716	43.59	11	1-640385-1
1.560	39.62	10	1-640385-0
1.404	35.66	9	640385-9
1.248	31.70	8	640385-8
1.092	27.74	7	640385-7
.936	23.77	6	640385-6
.780	19.81	5	640385-5
.624	15.85	4	640385-4
.468	11.89	3	640385-3
.312	7.92	2	640385-2

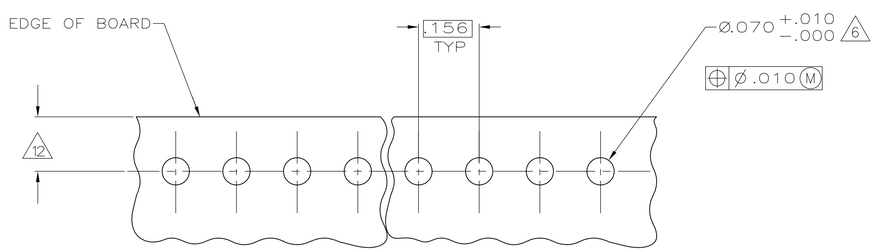

RECOMMENDED MOUNTING HOLE PATTERN FOR .063 THICK P.C. BOARD

IN	MM	IN	MM
.065	1.65	-	-
.063	1.60	-	-
.060	1.52	1.000	25.40
.045	1.14	.475	12.07
.030	0.76	.430	10.92
.018	0.46	.390	9.91
.015	0.38	.250	6.35
.012	0.30	.156	3.96
.010	0.25	.140	3.56
.008	0.20	.125	3.18
.005	0.13	.100	2.54
.003	0.08	.078	1.98
.001	0.03	.070	1.78

CONVERSION TABLE

THIS DRAWING IS A CONTROLLED DOCUMENT.

DIMENSIONS: INCHES

TOLERANCES UNLESS OTHERWISE SPECIFIED:
0 PLC ± -
1 PLC ± -
2 PLC ± -
3 PLC ± .005
4 PLC ± -
ANGLES ± -

MATERIAL 7 FINISH 7

DWN B. LEWIS 10-15-92
CHK R. SWING 10-15-92
APVD R. SPEER 1-11-93
PRODUCT SPEC —
APPLICATION SPEC —
WEIGHT —

TE Connectivity

NAME MTA-156 HEADER ASSEMBLY, PLAIN, RIGHT ANGLE, .045 SQUARE POST, TIN PLATED

SIZE	CAGE CODE	DRAWING NO	RESTRICTED TO
A1	00779	C-640385	—

CUSTOMER DRAWING SCALE 5:1 SHEET 1 OF 1 REV Y

4805 (3/11)