This drawing and all informations contained here can not be used or reproduced, integrally or partially, without written authorization by CS Srl.

SEZIONE A-A
SCALA 3 : 1

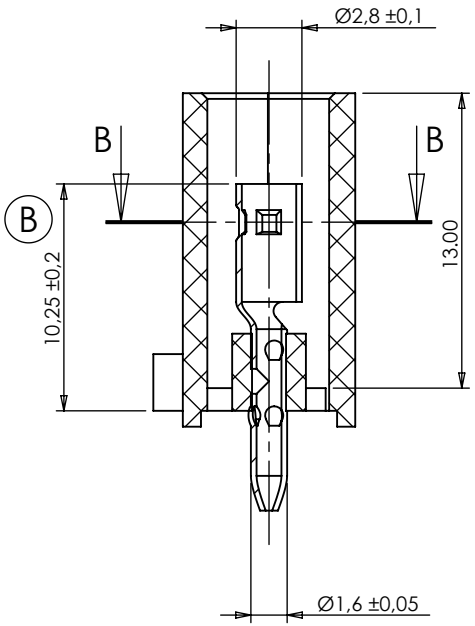

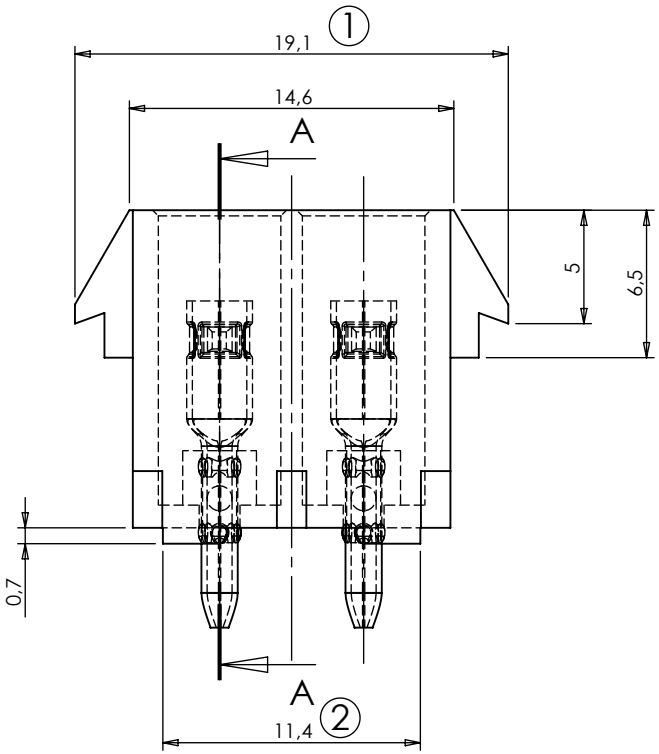

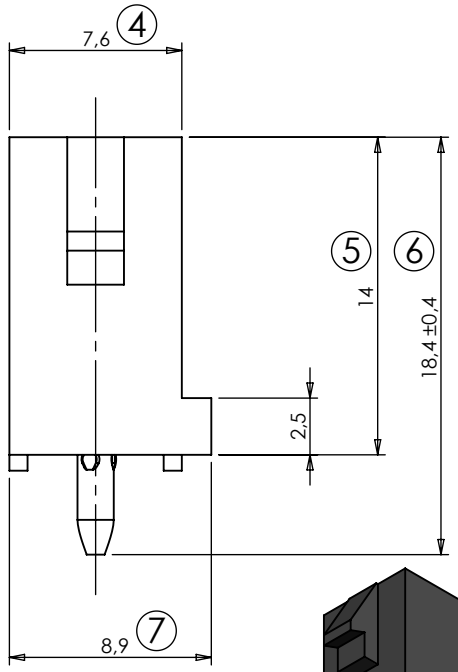

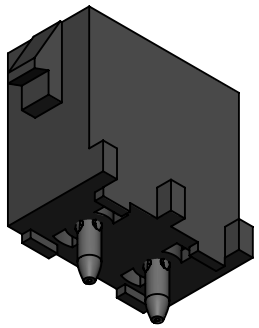

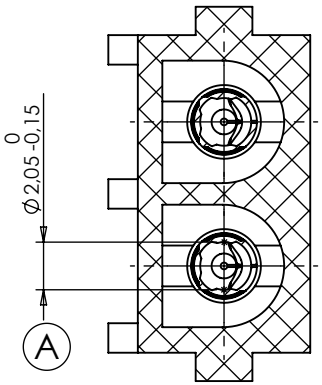

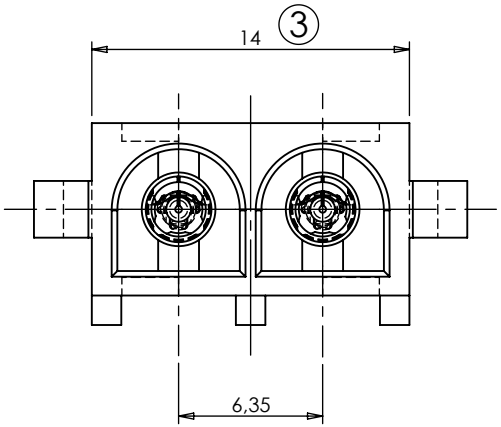

SEZIONE B-B
SCALA 3 : 1

DIMENSIONS WITHOUT TOLERANCES		
∢ ±2°	0 - 6	±0.1
	6 - 30	±0.2
	> 30	±0.3

PART NUMBER	MATERIAL
CS-LK02PCB/F	PA66 UL94 V-2
CS-LK02PCB/FV0	PA6/66 UL94 V-0
CS-LK02PCB/FSTY	PA46 UL94 V-2
CS-LK02PCB/FV0750NF	PA66 UL94 V-0 GWIT 775
CS-LK02PCB/F-G	PA6 UL94 V-2 GWIT 775

INDEX	MODIFICATION	DATE
1	Aggiornato cartiglio e aggiunto quote A e B	13-02-2019

CS S.r.l.
20063 CERNUSCO S/N - VIA COMO, 11
TEL +39.02.9210.7404 - FAX +39.02.9210.0217
http://www.csconnectors.com - e-mail: info@csconnectors.com

CHECKED BY	DATE	DESIGN UNITS
Stefano Galimberti	13-02-2019	METRIC
DRAWN BY	**DATE**	**WEIGHT (g)**
Luca Viscardi	13-02-2019	1.05
CAD REFER	**SIZE / SCALE**	**INDEX 0**
Y:\dis\cs\lk\02vie\pcb\	A4 / 3:1	06-03-2002

BASE CODE	DESCRIPTION
CS-LK02PCB/F	Giunto 2 vie per scheda circuito stampato term. femmina serie LK