| PROJECT \ LEVEL | | A[better product] | B[average product] |
|---|---|---|---|
| Electrical Properties | Contact Rating | 1.0A, 12V DC | |
| | Initial Contact Resistance | 50mΩ max. | |
| | Insulation Resistance | 100MΩ min.500V DC | Skey/PD：100MΩ min.300V DC |
| | Withstand Voltage | 500V AC for 1 minute | 350 V AC for 1 minut |
| Durable Performance | There No Load | 6,000 Cycles | 5,000 Cycles |
| | Rated Load | 5,000 Cycles | 4,000 Cycles |
| Sterage temp. | | -35℃～+75℃(Operating Temp: ) | |
| Operating Force | | IF:20N MAX.(EF:10.0N MIN.) | |
| Heat Rrsistance | | IR Reflow:235℃,5sec. Manual:350℃,3sec. | |

| REVISION | | | |
|---|---|---|---|
| LTR | DESCRIPTION | DATE | APP |
| A0 | NEW RELEASE | 05/20/2020 | PECK |
| | | | |
| | | | |

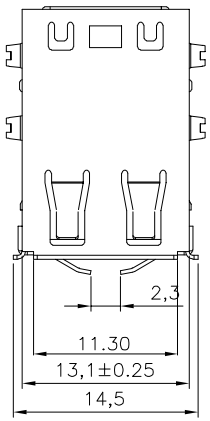


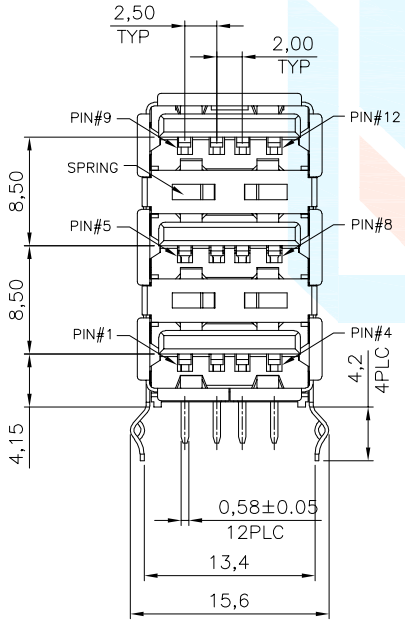


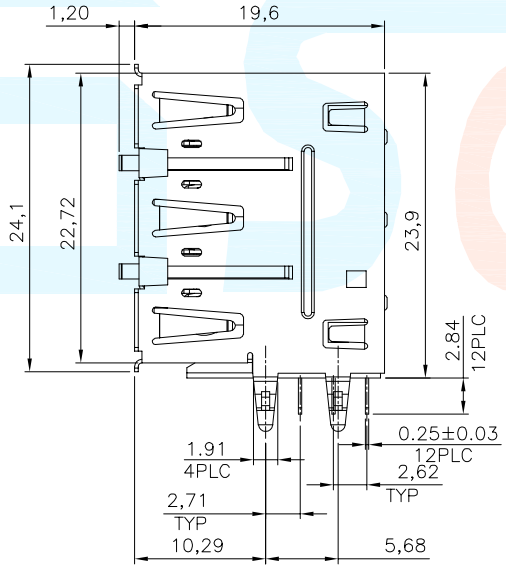


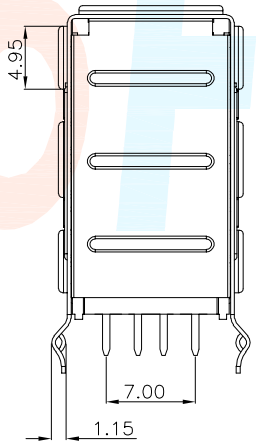


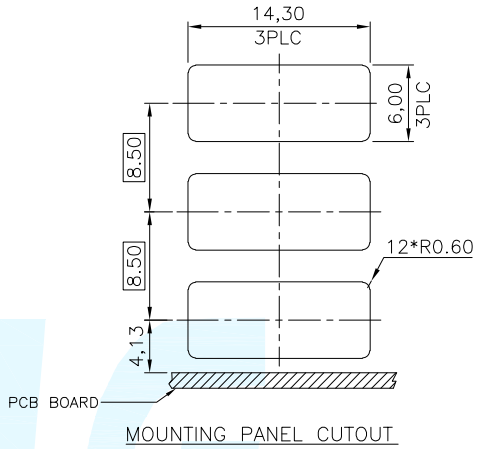


P.C.B LAYOUT

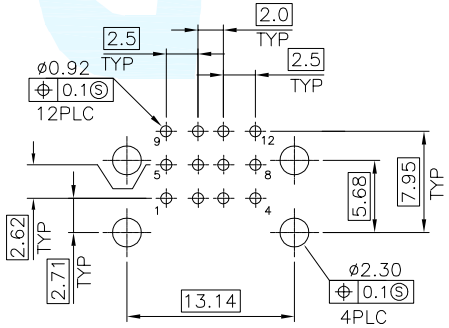


## Material declaration

| No. | NAME | Description |
|---|---|---|
| ① A | 胶芯 | PBT 耐热塑胶 |
| ② B | 接触端子 | 磷铜 C5191(镀金 1u″ /焊尾雾锡) |
| ③ C | 外壳 | 黄铜 C2680/SPCC[镀镍 50u″ min] |

| | | |
|---|---|---|
| 1、5、9 | VCC | +5V |
| 2、6、10 | -DATA 0 | Neagative Data Channel 0 |
| 3、7、11 | +DATA 0 | Positive Data Channel 0 |
| 4、8、12 | GND | Ground |

| DIMENSION CLASSIFICATION | | | 台灣碩方精密電子科技有限公司 TAIWAN SOFNG PRECISION ELECTRONIC CO., LTD | | | | | |
|---|---|---|---|---|---|---|---|---|
| ■ : CRITICAL | | | TITLE | USB-335A 三层USB连接器 2.0卧插式带卷边 | | | SOFNG 開關,連接器 | |
| ⊠ : MAJOR | | | | | | | | |
| TOLERANCE TABLE | | | PART NO. | USB-335A | | | SERIES | SD106 |
| .X | ± | 0.40 | APPROVED | Peck | DWG NO. | SOF-G006 | | |
| .XX | ± | 0.25 | CHECKED | Paul | SCALE 1:1 | UNIT mm | SIZE | A4 |
| .XXX | ± | 0.10 | DRAWIN | David | | REV A0 | SHEET NO. | 1/1 |
| ANGLE | ± | 2° | | | | | | |