ITEM NO.	PART NUMBER	DESCRIPTION	QTY.	COMPONENT NOTES
1	50-00430	Connector, USB AB mini receptacle	1	
2	50-00427	Connector, USB B plug, molding style	1	
3	30-00088	Wire, 4C, 1PR + 2C, 28 AWG, UL2725, 30V, 80C, 3.6 mm, shielded, VW-1, PVC, 79A, USB 2.0	1	
4	24-00059	Overmold, jack, USB mini AB	1	PVC, black
5	24-00021	Overmold, plug, USB B	1	PVC, black

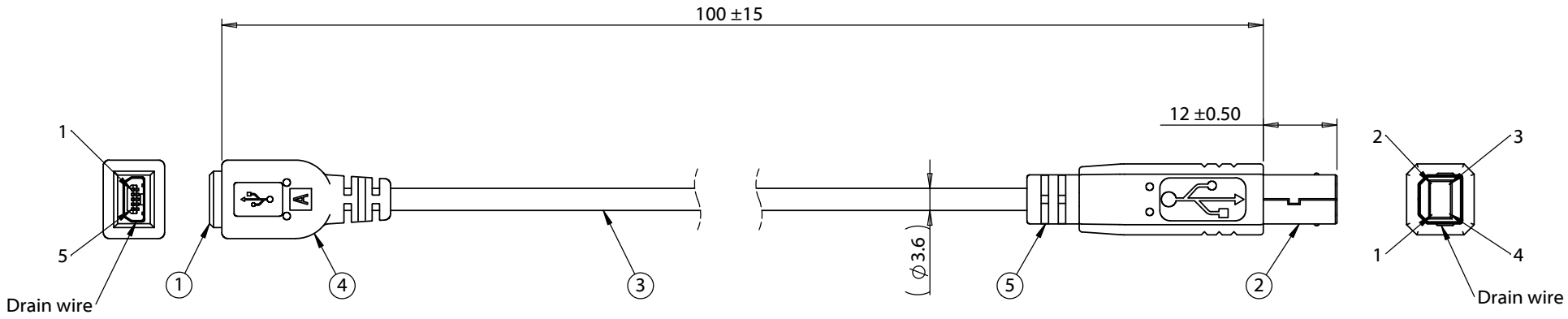

Wiring diagram		
50-00430	Wire Color	50-00427
1	Red	1
2	White	2
3	Green	3
5	Black	4
Shell	Drain & Shield	Shell

Notes:
Cables individually tied and bundled in groups of 10

Functionally equivalent components may be substituted

Revision:	Date:	Description:
A	8/24/2011	Initial release
A1	1/28/2014	Corrected shield type
A2	10/24/2018	Removed label

Prepared: AW Digitally signed by AW Date: 2018.11.01 10:52:29 -07'00'

Verified: GL Digitally signed by GL Date: 2018.11.02 08:38:27 -07'00'

Dimensions are in millimeters.
Tolerances:
X: ± 0.5 mm
X.X: ± 0.3 mm
X.XX: ± 0.05 mm

Notes:

RoHS compliant

Function test: no open, no short circuit, no intermittent

Description:

Cable, 100 mm, USB mini A receptacle to USB B male, 28 AWG, 30-00088 wire

TENSILITY
tel 1.541.323.3228 800 877.670.7118
fax 1.541.323.4202 web tensility.com

Size: A
Part number: 10-00653
Scale: 1:1
Sheet 1 of 1

5 4 3 2 1

To see a custom version of this cable assembly, call Tensility at 541-323-3228 or email engineering@tensility.com