RoHS Compliant

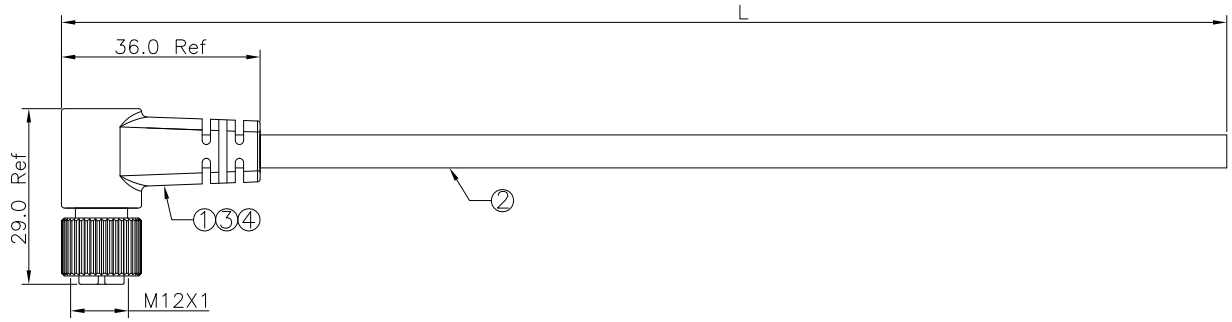

PIN	D CODING	PART NO.	CABLE LENGTH	CABLE GAUGE	COLOR
3Pin		1072F12-03-2-4-RA-00050	L=500MM	22AWG	Black
		1072F12-03-2-4-RA-00100	L=1000MM		
		1072F12-03-2-4-RA-00150	L=1500MM		
		1072F12-03-2-4-RA-00200	L=2000MM		
4Pin		1072F12-04-2-4-RA-00050	L=500MM	22AWG	Black
		1072F12-04-2-4-RA-00100	L=1000MM		
		1072F12-04-2-4-RA-00150	L=1500MM		
		1072F12-04-2-4-RA-00200	L=2000MM		
5Pin		1072F12-05-2-4-RA-00050	L=500MM	24AWG	Black
		1072F12-05-2-4-RA-00100	L=1000MM		
		1072F12-05-2-4-RA-00150	L=1500MM		
		1072F12-05-2-4-RA-00200	L=2000MM		

Specifications:
Standard:IEC 61076-2-101
Current rating:4A(3,4,5PIN)
Voltage rating:250V(3,4,PIN);60V(5PIN)
Contact Resistance:5 ohm Max.
Insulation Resistance:10M ohm Min., DC 450V
Operating Temperature:-40°C~80°C
IP Rating: IP67 in Locked Condition

3P PIN OUT:

P1	
1	Black
3	Red
4	Yellow

4P PIN OUT:

P1	
1	Black
2	Brown
3	Blue
4	Green

5P PIN OUT:

P1	
1	Black
2	Red
3	Green
4	Yellow
5	White

ITEM	PART NO.	DESCRIPTION	Q'TY
1	120512-XXS-D-MM	M12 SOCKET SOLDER TYPE	1
2	810B-2464XXXXCBK	UL2464 XXAWG*XXC PVC JACKET COLOR:BLACK	A/R
3	827-PVC-45P-BK	45P PVC MOLDING COLOR:BLACK	A/R
4	827-PE-WH	PE INNER MOLDING COLOR:WHITE	A/R

REV	DATE	FILE	BY

DRAWN:

CHECKED:

APPROVAL:

GENERAL TOLERANCE:
.X=±0.50
.XX=±0.30

UNIT: MM

SCALE:1:1

SHEET: 1 / 1

PROJECTION:

CnC Tech
Industrial Cable and Connector Technology

DESCRIPTION: M12 SOCKET OVER-MOULDING CABLES R/A TYPE

PART NO: 1072F12-XX-2-4-RA-XXXXX

SIZE A4