NOTES:

1. Rating: 2.5A 250VAC (UL, CUL)
   7A 125VAC (UL, CUL)
2. Contact resistance: 50mΩ Max
3. Insulation resistance: >100MΩ Min 500VDC
4. Dielectric strength: >2000VAC 0.5mA 1 minutes

电话：0769-82310511-867
邮箱：hooya89@hooya.hk

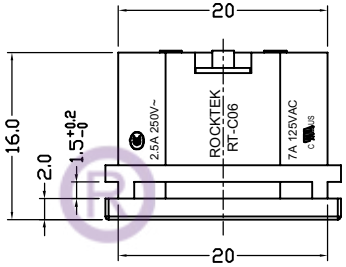

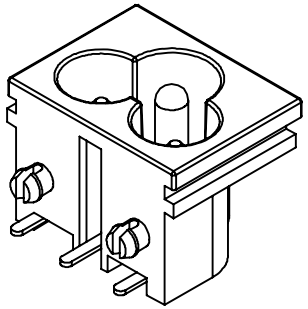

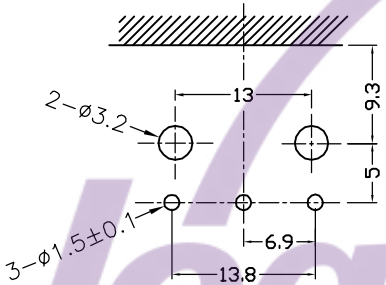

P.C.B Layout

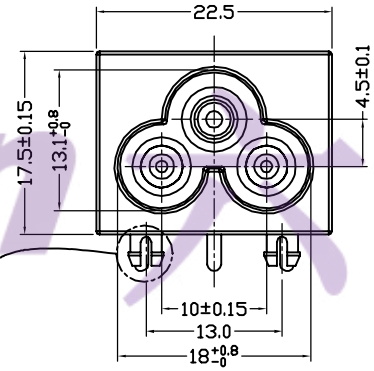

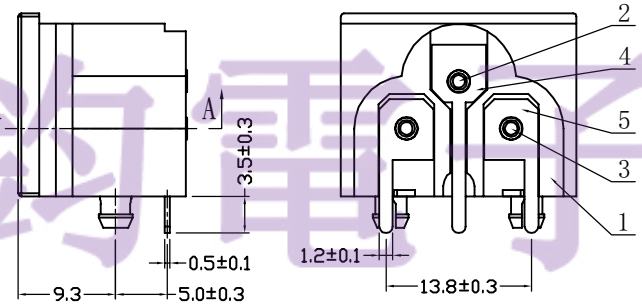

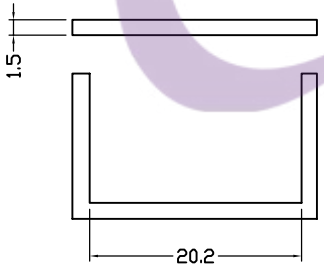

PANEL CUT-OUT

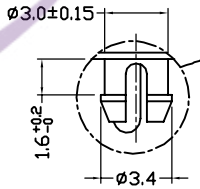

SCALE:2:1

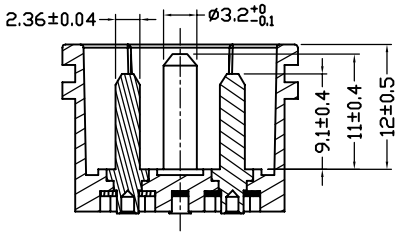

SECTION A-A

NO.	PART NAME	MATERIAL	Q'TY
5	2# terminal	C2680 1/2H Tin-plating	2
4	1# terminal	C2680 1/2H Tin-plating	1
3	2# PIN	C3602 Ni-plating	2
2	1# PIN	C3602 Ni-plating	1
1	BODY	PA66 Black	1

NO	DESCRIPTION	NO	DESCRIPTION
5	→	10	→
4	→	9	→
3	→	8	→
2	→	7	→
1	→	6	→

DIMENSIONAL TOLERANCES	
RANGE	TOLERANCE
X	±0.30
X.X	±0.20
X.XX	±0.10
ANGLES	±1°

APPROVED	CHECKED	DESIGN	DRAWN
			LMC 2020.11.14

LEGION ELECTRONIC & HARDWARE CO., LTD.

ALL SIZE ARE IN	MM
SCALE	NO
MAT'L	***
MATERIAL NO.	RT-C06-C1B-CC
DRAWING NO.	********
REV.	A0

legion 永鈞電子