SYMBOL DEFINITION		MISSING SYMBOLS
A DIMENSION WITHOUT AN INSPECTION REPORT SYMBOL (□) DOES NOT REQUIRE INSPECTION. IT MAY BE CONTROLLED ON THE INDIVIDUAL COMPONENT DRAWING.	TOTAL NO OF INSPECTIONS REQUIRED 16	NO MISSING SYMBOL NUMBER
	LAST NO. USED 12	

DWG STATUS					ZONE	REVISION HISTORY	AUTH	DR	APVD	APVD
DATE	STA	REV	N/P	CHG					1	2
21OC16	R	01	-	-	-	12052848 - WAS SEPARATE DRAWING; 35027669 - RELEASED PART DRAWING	43522	ESC	ESC	ETM
16APR17	R	02	-	-	-	35027669 - BOM WAS 12052846 & 12092601 AND UPDATED PART AVAILABILITY	43633	GLB	GLB	HP

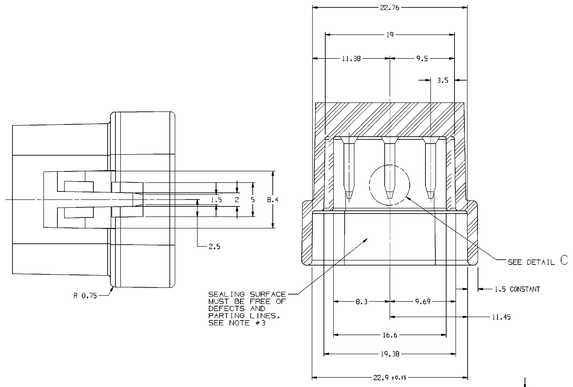

SECTION B-B

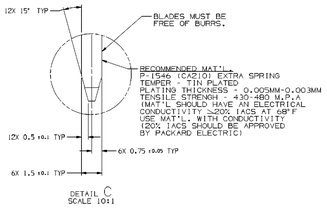

DETAIL C
SCALE 10:1

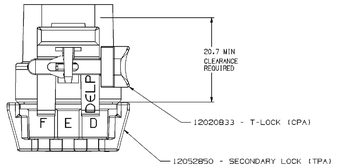

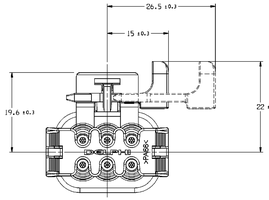

SCALE 3:1
AUXILIAR ASSEMBLY VIEW

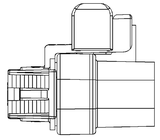

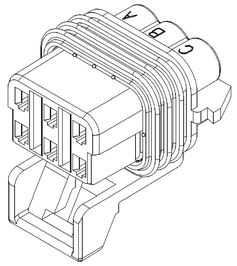

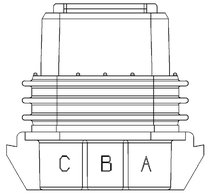

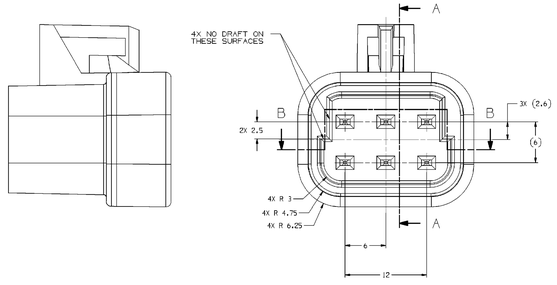

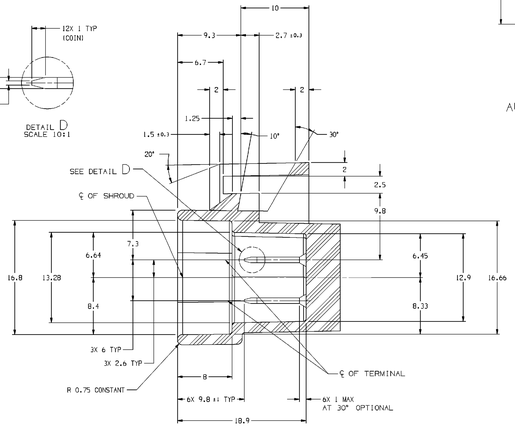

SECTION A-A

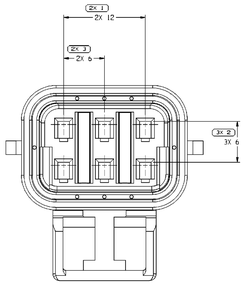

TYPE 101

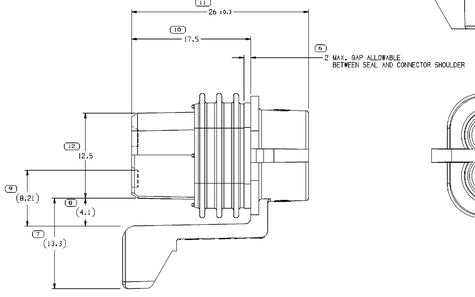

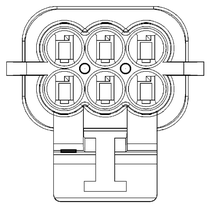

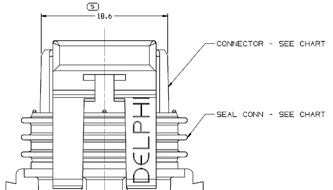

MATING CONNECTOR INFORMATION

RECOMMENDED MAT'L - GLASS REINFORCED NYLON OR POLYESTER.

NOTES

1. WHEN USING THIS INFORMATION FOR A NEW DESIGN, REQUEST THE LATEST COPY OF THIS PRINT FROM PACKARD ELECTRIC DIVISION.
2. ALL RADII 0.4, UNLESS OTHERWISE SPECIFIED.
3. THIS SURFACE IS "CRITICAL" FOR PART FUNCTION. ALSO, ALL THREE PLACE DIMENSIONS ARE "CRITICAL".
4. THE SHAPE OF THE SHROUD AND LOCK ARE REPRESENTATIVE. VARIATIONS FOR ADAPTING THE SHROUD FOR SPECIFIC DEVICES AND/OR MOLDING METHODS ARE PERMITTED AS LONG AS FUNCTION IS MAINTAINED.

NOTES

1. UNLESS OTHERWISE SPECIFIED AND/OR INDICATED:

   DIMENSIONS ARE TO FACE OF VIEW SHOWN AND AUTOMATICALLY ROUNDED BY COMPUTER FOR INSPECTION (SEE MATH MODEL FOR PRECISE DIMENSIONS). FOR ALL OTHER DIMENSIONS NOT SHOWN BUT REQUIRED FOR TOOL BUILD, SEE MATH MODEL FOR PRECISE TOOL PATH DATA.

2. WHEN PARTS ARE SHIPPED THEY MUST BE PACKED IN PLASTIC BAGS OR SHIPPING CONTAINERS MUST BE LINED WITH PLASTIC LINERS. BAGS OR LINERS MUST BE SEALED TO AVOID FOREIGN MATTER.
3. SEALING CODE 3 - DESIGN WILL PASS SALT FOG AND IMMERSION TEST AFTER CONDITIONING AS SPECIFIED IN: ESA-644 (WEATHER-PACK), ESA-710 (METRI-PACK), ESA-650 (UNDERHOOD MICRO-PACK), C-4006 (WORLD CONNECTOR), ETC WHEN MATED TO MATING PART OR EQUIVALENT
4. REFERENCE MATING COMPONENTS OR EQUIVALENT:

   CONNECTOR 12124107

5. THIS PART ACCEPTS THE FOLLOWING COMPONENTS OR EQUIVALENT:

   TERMINAL 12048074
   SECONDARY LOCK 12052850
   MAX CABLE O.D. 2.8MM.
   CABLE SEAL 12048086
   CONNECTOR POSITION ASSURANCE LOCK 12020833

35027669	01	AA	102	-	M351001	12052848
12052848	C1	-	101	12052846	12092601	-	-	-
PART NO	REV	N/P	TYPE	CONNECTOR	SEAL CONN	ADHESIVE	ASM CONN

DIMENSIONAL RANGES (MM)											
FROM	0	3	30	60	100	150	200	250	300	350	400
TO	3	30	60	100	150	200	250	300	350	400	450
TOLERANCE (PLUS OR MINUS UNLESS SPECIFIED)											
±0.15	±0.2	±0.3	±0.4	±0.5	±0.6	±0.7	±0.8	±1	±1.2	±1.4	

DELPHI TECHNOLOGIES, INC.

(N/A) PROCESS SENSITIVE DIMENSION

DIMENSION ENCLOSED IN ( ) INDICATE REFERENCE DIMENSION, OR NO TOLERANCE LIMITS ARE ESTABLISHED

THIRD ANGLE PROJECTION

DO NOT SCALE

USE MATH DATA

NX

THIS DRAWING IS THE PROPERTY OF DELPHI TECHNOLOGIES, INC. AND CONTAINS PROPRIETARY INFORMATION. NO REPRODUCTION OR USE WITHOUT WRITTEN PERMISSION OF DELPHI TECHNOLOGIES, INC. IS PROHIBITED. ALL RIGHTS RESERVED.

DELPHI

DELPHI PHOVIS ELECTRICAL/ELECTRONIC ARCHITECTURE (PHOVIS)

COPYRIGHT 2004 DELPHI CORPORATION HELM# 176 AFFILIATES. ALL RIGHTS RESERVED.

THIS DRAWING IS THE PROPERTY OF DELPHI CORPORATION AND CONTAINS PROPRIETARY INFORMATION. NO REPRODUCTION OR USE WITHOUT WRITTEN PERMISSION OF DELPHI CORPORATION IS PROHIBITED.

DWG TYPE	PART DRAWING
SCALE	
VALUE CHAT	SYSTEM CODE

UNLESS OTHERWISE SPECIFIED

THIS DOCUMENT IS IN ACCORDANCE WITH ASME Y14.5M-1994 AS ENHANCED BY DELPHI BUSINESS PROCESSES AND ASSOCIATED DELPHI STANDARDS. ALL DIMENSIONS AND FEATURES ARE DEFINED BEFORE/AFTER PROCESSING OF SYSTEM REFERENCE.

ALL DIMENSIONS ARE IN MILLIMETERS

REFERENCE

DR	EDUARDO SENA	21OC16
APVD1	EDUARDO SENA	21OC16
APVD2	EDUARDO PENUTO	23OC16
APVD3		
APVD4		

SUBSTANCES OF CONCERN: NO RECYCLED CONTENT PER DELPHI (2HF002)

DRAWING SIZE: SIZE CHART

DRAWING NAME: TAXI ASM CONN M/P 150

DRAWING NUMBER: 35039194

SIZE	SCALE	SHEET NO	SHEET NO	STA	REV	N/P
A1x3	5:1	1 OF 2	1 OF 1	R	02	-

DRAWING NUMBER: 35039194

SIZE	SCALE	SHEET NO	SHEET NO	STA	REV	N/P
A1x3	5:1	2 OF 2	1 OF 1	R	02	-

32039194